Workshop Manual

Polo 1995 ➤

4-cylinder injection engine (2-valve), mechanics									
Engine ID	ADX	AEA	AEE	AER	AEV	AEX	AKV	ALL	ANX
	APQ								

Edition 04.2008

Protected by copyright. Copying for private or commercial purposes, in part or in whole, is not permitted unless authorised by Volkswagen AG. Volkswagen AG does not guarantee or accept any liability with respect to the correctness of information in this document. Copyright by Volkswagen AG.

satelettronica

List of Workshop Manual Repair Groups

Repair Group

00 - Technical data
10 - Removing and installing engine
13 - Crankshaft group
15 - Cylinder head, valve gear
17 - Lubrication
19 - Cooling
20 - Fuel supply system
26 - Exhaust system

satelettronica

Protected by Copyright. Copying for private or commercial purposes, in part or in whole, is not permitted unless authorised by Volkswagen AG. Volkswagen AG does not guarantee or accept any liability with respect to the correctness of information in this document. © Copyright by Volkswagen AG.

Technical information should always be available to the foremen and mechanics, because their careful and constant adherence to the instructions is essential to ensure vehicle road-worthiness and safety. In addition, the normal basic safety precautions for working on motor vehicles must, as a matter of course, be observed.

All rights reserved.
No reproduction without prior agreement from publisher.

Copyright © 2015 Volkswagen AG, Wolfsburg

00050205720

Contents

00 - Technical data . . . 1

1 Technical data . . . 1
1.1 Engine number . . . 1
1.2 Engine data . . . 1

10 - Removing and installing engine . . . 3

1 Removing and installing engine . . . 3
1.1 Tools . . . 3
1.2 Notes on removing . . . 4
1.3 Notes on installing . . . 5
1.4 Specified torques . . . 6
1.5 Assembly mountings . . . 7
1.6 Additional notes and assembly work for vehicles with air conditioner . . . 8

13 - Crankshaft group . . . 9

1 Crankshaft group . . . 9
1.1 Dismantling and assembling engine . . . 9
1.2 Removing and installing poly V-belt . . . 13
1.3 Removing, installing and tensioning toothed belt . . . 14
1.4 Checking semi-automatic toothed belt tensioning roller . . . 16
2 Dismantling and assembling cylinder block, crankshaft and flywheel . . . 19
2.1 Cast iron cylinder block . . . 19
2.2 Aluminium cylinder block . . . 20
2.3 Renewing crankshaft oil seal - belt pulley end . . . 22
2.4 Vehicles with Duocentric oil pump . . . 23
2.5 Crankshaft dimensions . . . 25
3 Dismantling and assembling pistons and conrods . . . 26
3.1 Engine code . . . 26
3.2 Piston and cylinder dimensions . . . 31

15 - Cylinder head, valve gear . . . 33

1 Cylinder head, valve gear . . . 33
1.1 Assembly overview - cylinder head . . . 33
1.2 Removing and installing cylinder head . . . 35
1.3 Checking compression . . . 39
2 Repairing valve gear . . . 40
2.1 Assembly overview - valve gear . . . 40
2.2 Reworking valve seats . . . 43
2.3 Renewing camshaft oil seal . . . 46
2.4 Checking hydraulic bucket tappets . . . 48
2.5 Removing and installing camshaft . . . 49
2.6 Checking valve guides . . . 50
2.7 Renewing valve guides . . . 51
2.8 Renewing valve stem seals . . . 52

17 - Lubrication . . . 55

1 Lubrication . . . 55
1.1 Removing and installing parts of lubrication system . . . 55
1.2 Removing and installing sump . . . 60
1.3 Removing and installing Duocentric oil pump . . . 62
1.4 Checking oil pressure and oil pressure switch . . . 64

19 - Cooling . . . 67

Volkswagen AG does not guarantee or accept any liability with respect to the correctness of information in this document. Copyright by Volkswagen AG.
Protected by copyright. Copying for private or commercial purposes, in part or in whole, is not permitted unless authorised by Volkswagen AG.
satelettronica

1 Cooling 67
1.1 Removing and installing parts of cooling system 67
1.2 Parts of cooling system, body side 67
1.3 Parts of cooling system, engine side 69
1.4 Draining and filling coolant 71
1.5 Removing and installing radiator 74

20 - Fuel supply system 76
1 Fuel supply system 76
1.1 Removing and installing parts of fuel supply system 76
1.2 Safety precautions when working on fuel supply system 79
1.3 Rules for cleanliness 79
1.4 Checking fuel pump 80
1.5 Removing and installing fuel delivery unit 85
1.6 Removing and installing fuel tank 86
1.7 Adjusting accelerator cable 87
1.8 Removing and installing parts of activated charcoal filter system 87
1.9 Checking fuel tank breather 89

26 - Exhaust system 92
1 Exhaust system 92
1.1 Removing and installing parts of exhaust system 92

Protected by copyright. Copying for private or commercial purposes, in part or in whole, is not permitted unless authorised by Volkswagen AG. Volkswagen AG does not guarantee or accept any liability with respect to the correctness of information in this document. Copyright by Volkswagen AG.
satelettronica

00 – Technical data

1 Technical data

1.1 Engine number

The engine number (“code letters” and “serial number”) can be found on the front of the cylinder block at the gearbox end below the thermostat housing.

Additionally there is a sticker on the toothed belt guard with “engine code” and “serial number”.

The engine code is also included on the vehicle data sticker.

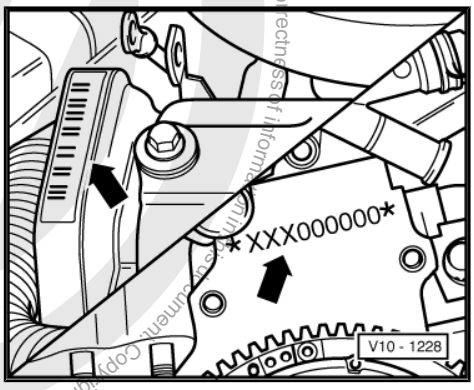

1.2 Engine data

Code		ADX	AEA	AEE	AER
Manufactured		09.94…07.95	09.94…07.95	08.95 ▸	08.96 ▸
Capacity	cm^3	1298	1598	1598	999
Output	kW at rpm	40/5200	55/5200	55/4800	37/5000
Torque	Nm at rpm	100/2800…3400	128/2800…3400	135/2800…3600	86/3000…3600
Bore	∅ mm	76.5	76.5	76.5	67.1
Stroke	mm	70.6	86.9	86.9	70.6
Compression ratio		10.0	10.0	9.8	10.5
RON	min.	95 unleaded[1)]	95 unleaded[1)]	95 unleaded[1)]	95 unleaded[1)]
Injection/ignition		Mono-Motronic 1.3	Mono-Motronic 1.3	1AV	Motronic 9.0
Knock control		x	x	x	x
Self-diagnosis		x	x	x	x
Lambda control		x	x	x	x
Catalytic converter		x/-	x	x	x
Turbocharging/supercharging		-	-	-	-

1) In exceptional circumstances min. 91 RON, however with reduced performance.

Code		AEV	AEX, APQ	AKV	ALL
Manufactured		10.94…07.96	08.95 ▸	05.97 ▸	08.97 ▸
Capacity	cm^3	1043	1390	1390	999
Output	kW at rpm	33/5200	44(40[2)])/4700	44/4700	37/5000
Torque	Nm at rpm	76/2800…3200	116/2800…3200(116/3000[2)])	116/2800…3200	86/3000…3600
Bore	∅ mm	75	76.5	76.5	67.1
Stroke	mm	59	75.6	75.6	70.6
Compression ratio		10.0	10.2	10.2	10.5

Protected by copyright. Copying for private or commercial purposes, in part or in whole, is not permitted unless authorised by Volkswagen AG. Volkswagen AG does not guarantee or accept any liability with respect to the correctness of information in this document. Copyright by Volkswagen AG.
satelettronica

Code	AEV	AEX, APQ	AKV	ALL
RON min.	95 unleaded	95 unleaded[3)]	95 unleaded[3)]	95 unleaded[3)]
Injection/ignition	Mono-Motronic 1.2.3R	Motronic 9.0	Motronic 9.0	Motronic 9.0
Knock control	-	x	x	x
Self-diagnosis	x	x	x	x
Lambda control	x	x	x	x
Catalytic converter	x	x	x	x
Turbocharging/supercharging	-	-	-	-

2) Austria: Output reduced through restrictor in catalytic converter.

3) In exceptional circumstances min. 91 RON, however with reduced performance.

Code		ANX
Manufactured		01.98 ▸
Capacity	cm^3	1390
Output	kW at rpm	40/4700
Torque	Nm at rpm	(116/3000)
Bore	∅ mm	76.5
Stroke	mm	75.6
Compression ratio		10.2
RON	min.	95 unleaded[4)]
Injection/ignition		Motronic 9.0
Knock control		x
Self-diagnosis		x
Lambda control		x
Catalytic converter		x
Turbocharging/supercharging		-

4) In exceptional circumstances min. 91 RON, however with reduced performance.

Protected by copyright. Copying for private or commercial purposes, in part or in whole, is not permitted unless authorised by Volkswagen AG. Volkswagen AG does not guarantee or accept any liability with respect to the correctness of information in this document. Copyright by Volkswagen AG.
satelettronica

10 – Removing and installing engine

1 Removing and installing engine

1.1 Tools

Special tools and workshop equipment required

- Drip tray -V.A.G 1306-
- Hose clip pliers -V.A.G 1921-
- Lifting tackle -2024 A-
- Workshop hoist - V.A.G 1202 A-
- Torque wrench -V.A.G 1331-
- Torque wrench -V.A.G 1332-
- Grease -G 000 100- (vehicles with manual gearbox)
- Cable tie

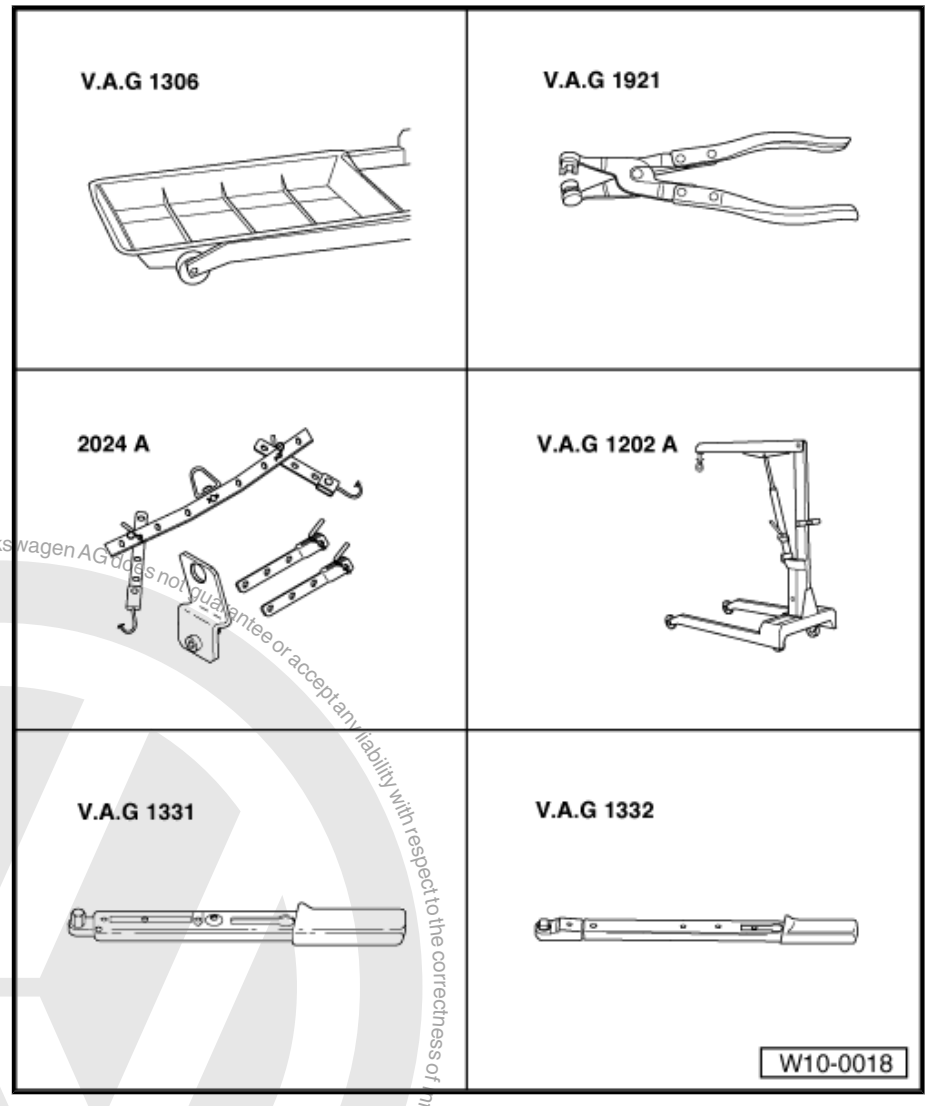

When the engine is to be dismantled:

- Engine and gearbox support -VW 540-

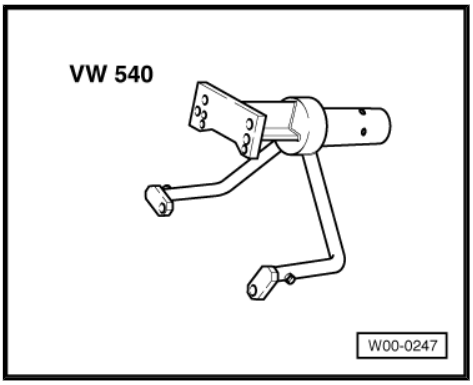

Protected by copyright. Copying for private or commercial purposes, in part or in whole, is not permitted unless authorised by Volkswagen AG. Volkswagen AG does not guarantee or accept any liability with respect to the correctness of information in this document. Copyright by Volkswagen AG.
satelettronica

1.2 Notes on removing

- First check whether a coded radio is fitted. If so, obtain anti-theft coding.
- The engine is removed forwards together with the gearbox.
- With ignition switched off disconnect battery earth strap and remove battery.
- Place positive wire from battery to starter motor to one side (removed together with assembly).

Note

All cable ties which are opened or cut through when the engine is removed must be replaced in the same position when the engine is installed.

- Drain coolant ⇒ page 71 .
- Remove lock carrier with attachments: ⇒ General body repairs, exterior; Rep. Gr. 50 ; Removing and installing lock carrier with attachments
- Disconnect clutch cable:⇒ Manual gearbox; Rep. Gr. 30 ; Repairing clutch mechanism; Removing and installing clutch cable

Vehicles with power-assisted steering:

- Unbolt power-assisted steering vane pump and secure to sub-frame with wire; hoses remain connected: ⇒ Running gear; Rep. Gr. 48 ; Assembly overview: vane pump, reservoir, hydraulic lines; Removing and installing power-assisted steering vane pump .

Vehicles with air conditioning:

- Observe additional remarks and installation work ⇒ page 8 .
- Unbolt pendulum support from gearbox.

Vehicles with power-assisted steering:

- Tie-up power-assisted steering reservoir.

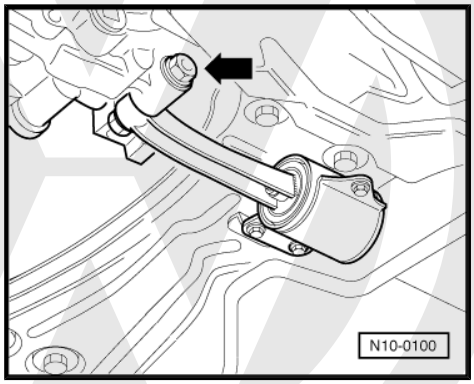

Protected by copyright. Copying for private or commercial purposes, in part or in whole, is not permitted unless authorised by Volkswagen AG. Volkswagen AG does not guarantee or accept any liability with respect to the correctness of information in this document. Copyright by Volkswagen AG.
satelettronica

– Attach lifting tackle -2024 A- as follows and lift slightly with workshop crane -V.A.G 1202 A- :

Belt pulley end: 2nd hole in hook rail at position -1-

Flywheel end: 2nd hole in hook rail at position -5-

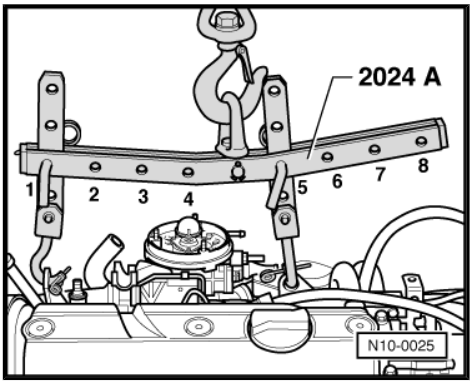

WARNING

The hooks and locating pins must be secured with locking pins.

Note

- *The positions marked 1...4 on the bar must be towards the pulley end.*
- *The holes in the hooks are counted up from the hook.*

– Unbolt assembly at gearbox and engine mountings.

– Lower assembly until it is released from the gearbox mounting.

– Pull assembly out forwards. Turn assembly and lift again lightly when doing this.

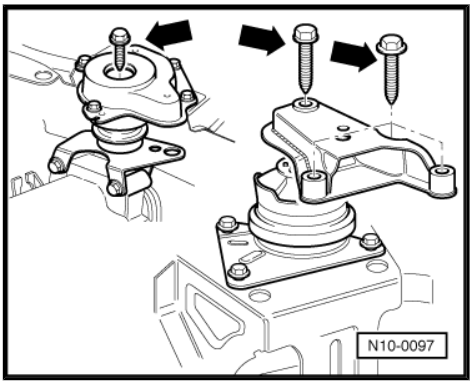

Note

When lifted out, the assembly must be carefully guided to prevent damage to the bodywork.

Before carrying out repair work, secure engine on assembly stand with engine and gearbox support -VW 540- .

1.3 Notes on installing

Installation is carried out in the reverse sequence. When doing this note the following:

– Check clutch release bearing for wear and renew if necessary.

– Lightly grease clutch release bearing, release bearing guide sleeve and splines on input shaft with G 000 100.

– Check whether dowel sleeves for centring engine and gearbox are in cylinder block and install if necessary.

– When swinging engine in, ensure that there is clearance between drive shafts.

– Align engine mountings stress-free by rocking, if necessary loosen engine mountings to body.

Protected by copyright. Copying for private or commercial purposes, in part or in whole, is not permitted unless authorised by Volkswagen AG. Volkswagen AG does not guarantee or accept any liability with respect to the correctness of information in this document. Copyright by Volkswagen AG.
satelettronica

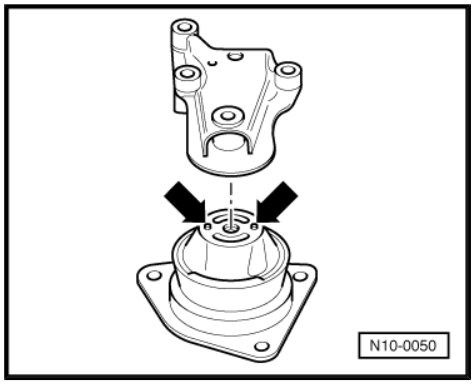

- When installing the engine mounting ensure that the bonded rubber bush pins locate in the engine mounting -arrows-.
- Renew pointed bolt for securing selector finger (clean threads in selector finger).

Vehicles with power-assisted steering:

- Install power-assisted steering vane pump: ⇒ Running gear; Rep. Gr. 48 ; Assembly overview: vane pump, reservoir, hydraulic lines; Removing and installing power-assisted steering vane pump
- Install clutch cable:⇒ Manual gearbox; Rep. Gr. 30 ; Repairing clutch mechanism; Removing and installing clutch cable
- Install lock carrier with attachments ⇒ General body repairs, exterior; Rep. Gr. 50 ; Removing and installing lock carrier with attachments

Vehicles with air conditioning:

- Install air conditioner compressor: ⇒ Heating and air conditioning system; Rep. Gr. 87 ; Removing and installing air conditioner compressor
- Electrical connections and routing: ⇒ Current flow diagrams, Electrical fault finding and Fitting locations
- Secure all lines and hoses with cable ties and clips again. When doing this note coloured markings.
- Fill with coolant ⇒ page 71 .
- Adjusting accelerator cable ⇒ page 87 .
- Check ignition timing and adjust as necessary: ⇒ Engine - Mixture preparation; Rep. Gr. 28 ; Mono-Motronic Injection and Ignition system, Checking and adjusting ignition timing
- Carry out basic settings: ⇒ Engine - Mixture preparation; Rep. Gr. 24 ; Mono-Motronic Injection and Ignition system, Cary out basic settings
- Adapting engine electronics control unit to immobiliser: ⇒ Engine - Mixture preparation; Rep. Gr. 24 ; Adapting engine electronics control unit to immobiliser

1.4 Specified torques

Threaded connection		Specified torque
Engine to gearbox	M10	45 Nm
	M12	80 Nm
Starter to gearbox		20 Nm
Drive shafts to flange shafts		45 Nm
Protective plate for flywheel		10 Nm
Selector finger to selector rod		25 Nm
Exhaust pipe to exhaust manifold	M10	40 Nm
	M8	25 Nm

Protected by copyright. Copying for private or commercial purposes, in part or in whole, is not permitted unless authorised by Volkswagen AG. Volkswagen AG does not guarantee or accept any liability with respect to the correctness of information in this document. Copyright by Volkswagen AG.
satelettronica

Protected by copyright. Copying for private or commercial purposes, in part or in whole, is not permitted unless authorised by Volkswagen AG. Volkswagen AG does not guarantee or accept any liability with respect to the correctness of information in this document. Copyright by Volkswagen AG.

1.5 Assembly mountings

1.5.1 Specified torques

Note

The bolts must not be used again.

Engine assembly mounting

- A = 50 Nm
- B = 50 Nm
- C = 20 Nm + 1/8 turn (45 °) further

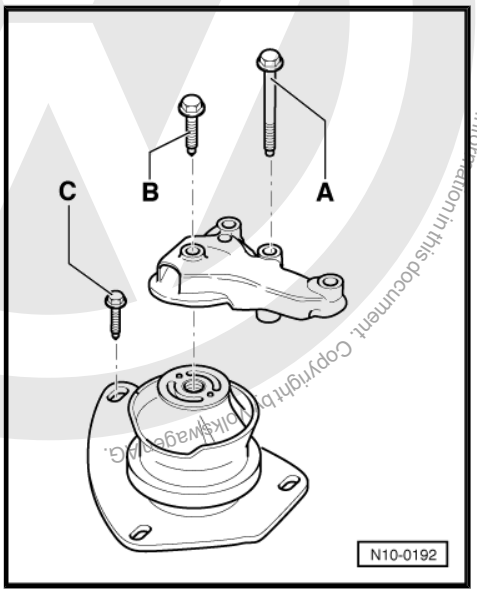

Gearbox assembly mounting

- A = 80 Nm
- B = 20 Nm + 1/8 turn (45 °) further
- C = 50 Nm

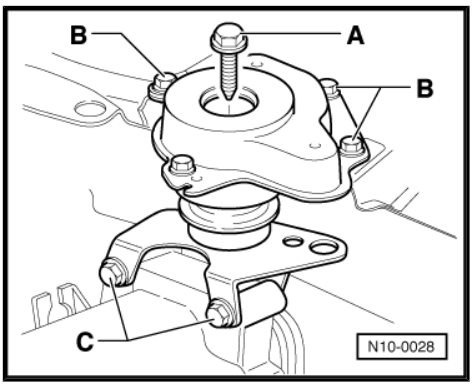

Pendulum support

- A = 50 Nm (tighten at the nut)
- B = 35 Nm

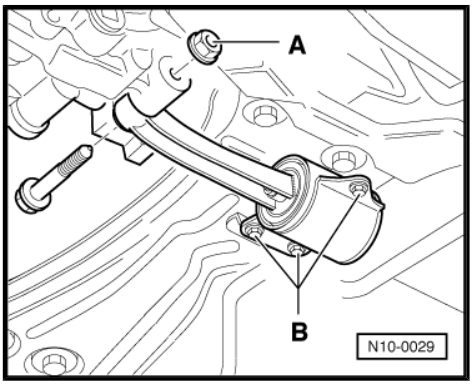

satelettronica

1.6 Additional notes and assembly work for vehicles with air conditioner

WARNING

The air conditioner refrigerant circuit must not be opened.

Note

To prevent damage to condenser and also to refrigerant lines/ hoses, ensure that the lines and hoses are not stretched, kinked or bent.

To facilitate removing and installing engine without opening refrigerant circuit:

- Unbolt air conditioner fluid reservoir and allow to hang free.
- Unbolt retaining clamp(s) for refrigerant lines.
- Remove poly V-belt ⇒ page 13 .
- Remove lock carrier with attachments: ⇒ General body repairs, exterior; Rep. Gr. 50 ; Removing and installing lock carrier with attachments
- Remove air conditioner compressor: ⇒ Heating and air conditioning system; Rep. Gr. 87 ; Removing and installing air conditioner compressor
- Place air conditioner compressor with radiator and condenser to side so that the refrigerant lines and hoses -arrows- are relieved.

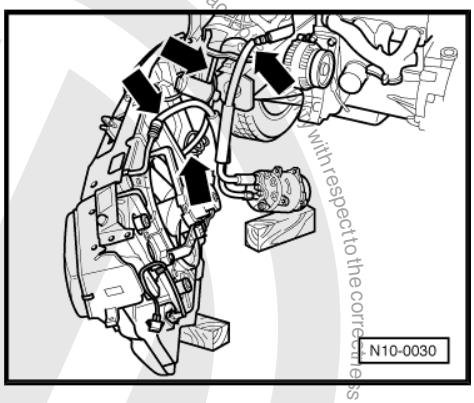

Protected by copyright. Copying for private or commercial purposes, in part or in whole, is not permitted unless authorised by Volkswagen AG. Volkswagen AG does not guarantee or ac
with respect to the correctness of information in this document. Copyright by Volkswagen AG.
satelettronica

13 – Crankshaft group

1 Crankshaft group

1.1 Dismantling and assembling engine

I - ⇒ page 10
II - ⇒ page 11
III - ⇒ page 12

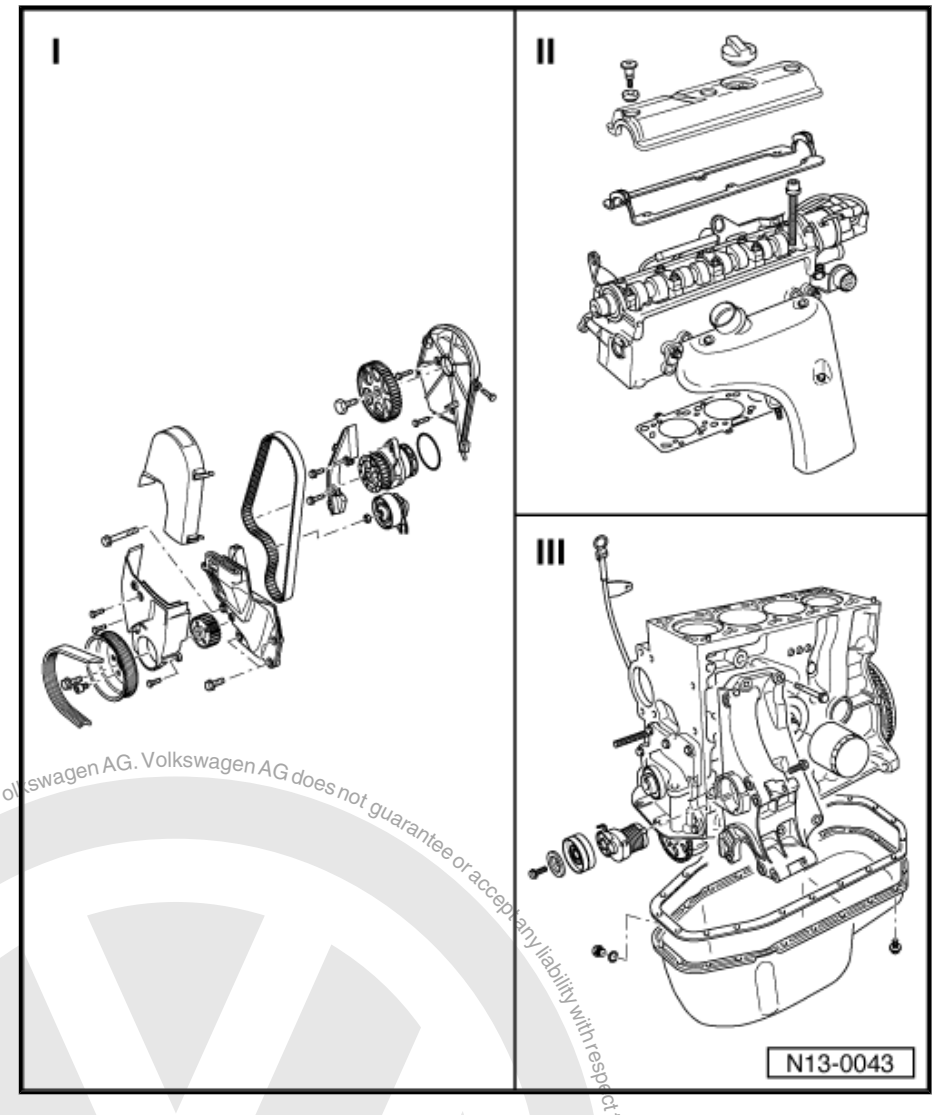

Protected by copyright. Copying for private or commercial purposes, in part or in whole, is not permitted unless authorised by Volkswagen AG. Volkswagen AG does not guarantee or accept any liability with respect to the correctness of information in this document. Copyright by Volkswagen AG.
satelettronica

1.1.1 Part I

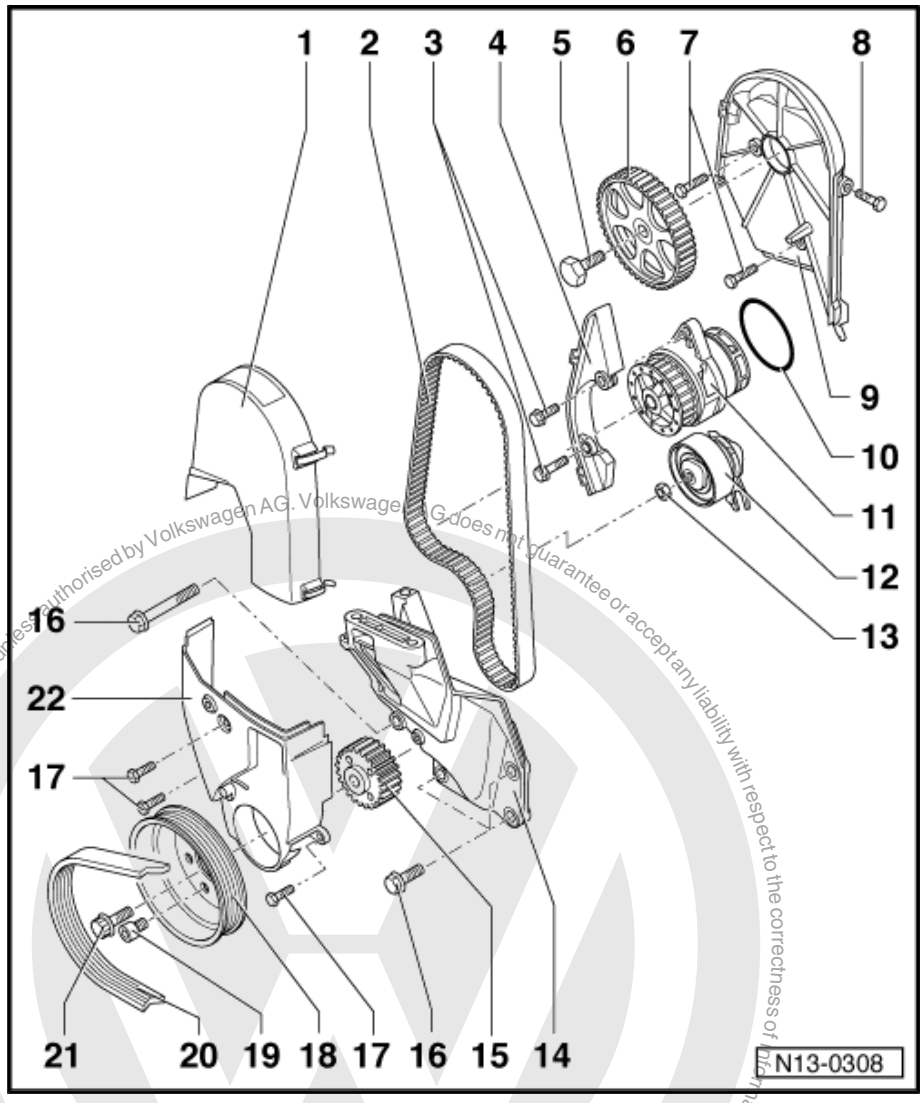

1 - Toothed belt guard upper part

2 - Toothed belt

- ❑ Mark direction of rotation before removing.
- ❑ Check for wear
- ❑ Do not kink
- ❑ Removing, installing and tensioning ⇒ page 14

3 - 20 Nm

4 - Toothed belt guard, coolant pump

5 - 20 Nm + 1/4 turn (90 °) further

- ❑ Renew

6 - Camshaft pulley

- ❑ Note position when installing toothed belt ⇒ page 14 .

7 - 10 Nm

- ❑ Insert with locking fluid - D 000 600 A2- .

8 - 10 Nm

9 - Rear toothed belt guard

10 - O-ring/seal

- ❑ Renew

11 - Coolant pump

12 - Tensioning roller

- ❑ Checking ⇒ page 16
- ❑ Removing, installing and tensioning ⇒ page 14

13 - 20 Nm

14 - Bracket

15 - Crankshaft toothed belt pulley

- ❑ Note position when installing toothed belt ⇒ page 14 .

16 - 40 Nm + 1/4 turn (90 °) further

- ❑ Renew

17 - 10 Nm

- ❑ For aluminium block: Renew bolts (coated with a sealant)

18 - Belt pulley

- ❑ When installing note fixing arrangement

19 - 20 Nm

20 - Poly V-belt

- ❑ Mark direction of rotation before removing.
- ❑ Removing and installing poly V-belt ⇒ page 13 .

Protected by copyright. Copying for private or commercial purposes, in part or in whole, is not permitted unless authorised by Volkswagen AG. Volkswagen AG does not guarantee or accept any liability with respect to the correctness of information in this document. Copyright by Volkswagen AG.
satelettronica

21 - Hexagon bolt: 90 Nm + 120° ($^1/_3$ turn) further; 12 point head bolt = 90 Nm + 90° ($^1/_4$ turn) further

- ❑ Renew
- ❑ Oil before installing.
- ❑ Turning further can be done in several stages.
- ❑ The extra turn angle can be checked using a commercial protractor e.g. Hazet 6690.

22 - Toothed belt guard lower part

1.1.2 Part II

1 - 5 Nm + $^1/_4$ turn (90 °) further

- ❑ Renew

2 - Sealing washer

- ❑ Renew

3 - Cylinder head cover

4 - Sealing cover

- ❑ Renew seal if damaged

5 - Cylinder head cover gasket

- ❑ Renew if damaged
- ❑ Before fitting coat transition points between bearing cap and cylinder head with sealant -D 454 300 A2- .

6 - Cylinder head bolt

- ❑ Renew
- ❑ Note installation instructions and sequence when loosening and tightening ⇒ page 35 .

7 - Cylinder head

- ❑ Removing and installing ⇒ page 35
- ❑ After renewing, renew entire coolant

8 - Cylinder head gasket

- ❑ Renew
- ❑ Engine codes: ADX, AEA, AEE, AER, AEX, AKV, ALL, ANX, APQ: metal gasket
- ❑ After renewing, renew entire coolant

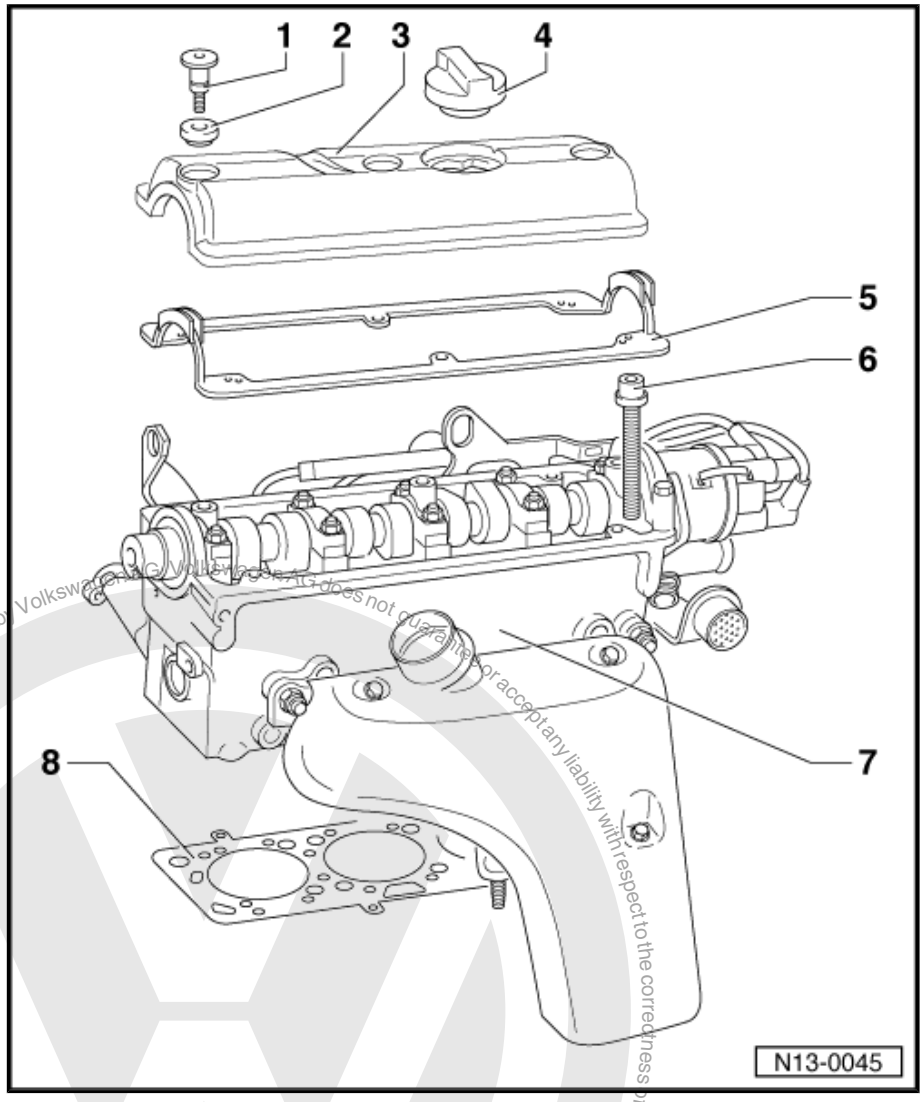

satelettronica
Protected by copyright. Copying for private or commercial purposes, in part or in whole, is not permitted unless authorised by Volkswagen AG. Volkswagen AG does not guarantee or accept any liability with respect to the correctness of information in this document. Copyright by Volkswagen AG.

1.1.3 Part III

Note

Repairing clutch ⇒ Manual gearbox ; Rep. Gr. 30 ; Repairing clutch release mechanism

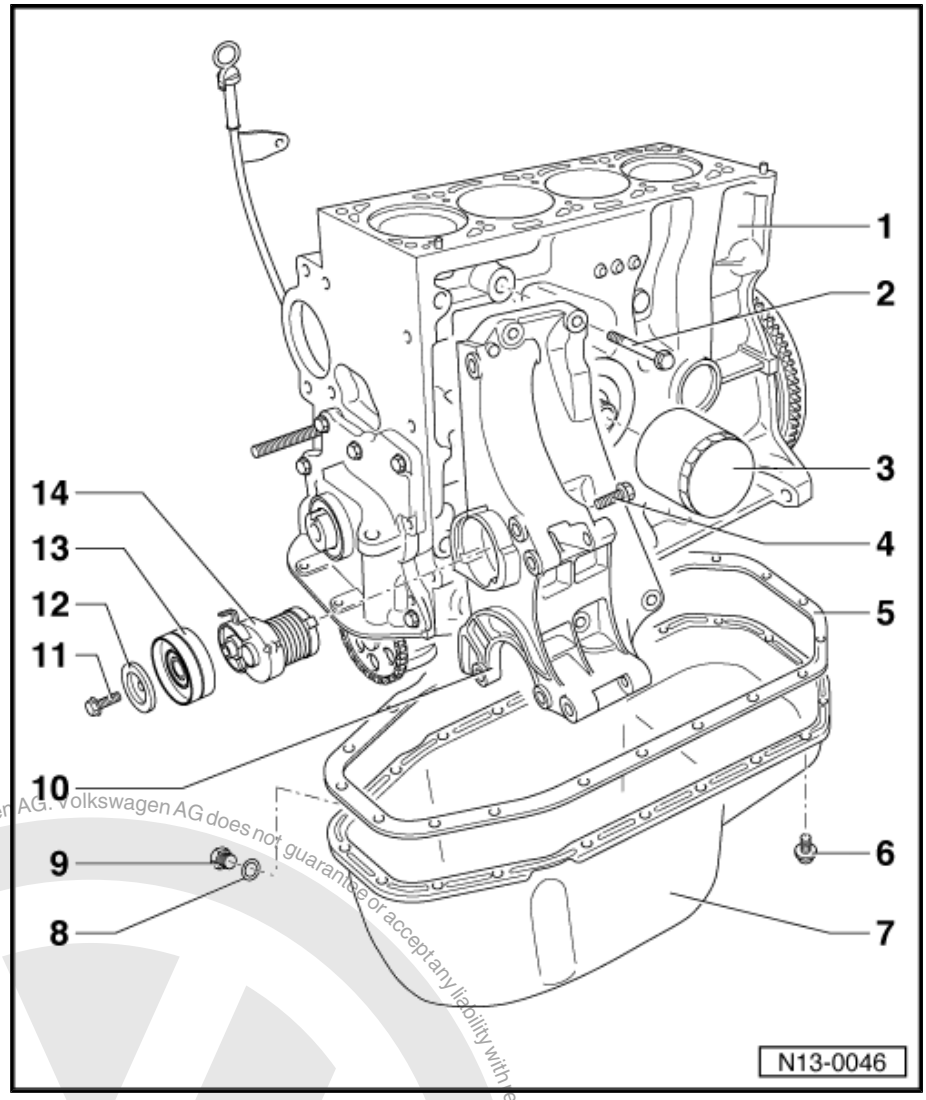

1 - Cylinder block

- ❑ Dismantling and assembling cast iron cylinder block ⇒ page 19
- ❑ Dismantling and assembling aluminium cylinder block ⇒ page 20
- ❑ Dismantling and assembling pistons and conrods ⇒ page 26

2 - Cast iron block: 45 Nm: Aluminium block: 55 Nm

- ❑ For aluminium block: Renew bolts (coated with a sealant)
- ❑ Tightening sequence: Upper right bolt first, then lower right bolt, and bolts on left last (as seen in direction of travel).

3 - Oil filters

- ❑ Loosen with strap wrench
- ❑ Tighten by hand.
- ❑ Observe installation instructions on oil filter.

4 - 20 Nm + 1/4 turn (90 °) further

- ❑ Renew

5 - Seal

- ❑ Not on engines with liquid gasket
- ❑ Renew
- ❑ Before fitting coat transition points sealing flange/cylinder block with sealant -D 002 989 A2- .

6 - 15 Nm

- ❑ Loosen and tighten flywheel end bolts only with long-reach Allen key -T10058- .

7 - Sump

- ❑ Remove and install on engines with liquid gasket ⇒ page 60 .

8 - Seal

- ❑ Renew

9 - Oil drain plug, 30 Nm

10 - Bracket

- ❑ For vane pump and alternator

satelettronica
Protected by copyright. Copying for private or commercial purposes, in part or in whole, is not permitted unless authorised by Volkswagen AG. Volkswagen AG does not guarantee or accept any liability with respect to the correctness of information in this document. Copyright by Volkswagen AG.

11 - 45 Nm

12 - Washer

13 - Tensioning roller

14 - Tensioning element

1.2 Removing and installing poly V-belt

Vehicles without power-assisted steering

Special tools and workshop equipment required

- Tensioning lever -3297-

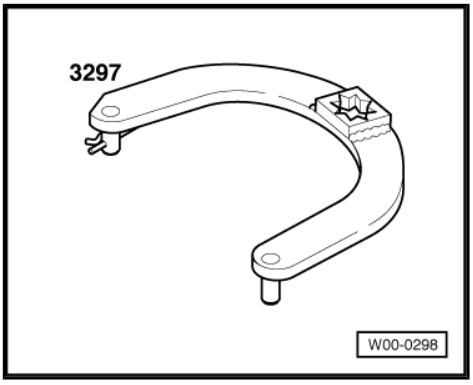

1.2.1 Procedure

– Mark direction of rotation of poly V-belt.

– Remove generator securing bolts.

– Fit Tensioning lever -3297- , secure with locking pin and pivot generator downwards (use, for example, torque wrench, to drive tensioning lever -3297-).

– Remove or fit poly V-belt.

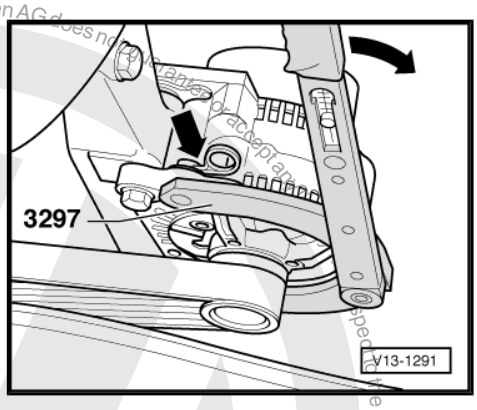

Note

When installing poly V-belt, ensure that belt seats correctly in pulleys.

– After fitting poly V-belt with alternator loose rotate engine several times (approx. 10 revolutions of engine), to do this operate starter briefly.

– Tighten first lower, then upper generator bolt to 25 Nm.

1.2.2 Vehicles with power-assisted steering

– Remove the poly V-belt cover.

– Mark direction of rotation of poly V-belt.

Protected by copyright. Copying for private or commercial purposes, in part or in whole, is not permitted unless authorised by Volkswagen AG. Volkswagen AG does not guarantee or accept any liability with respect to the correctness of information in this document. Copyright by Volkswagen AG.
satelettronica

– Using a spanner on the securing bolt, swing tensioning roller -in direction of arrow-.
– Remove or fit poly V-belt.

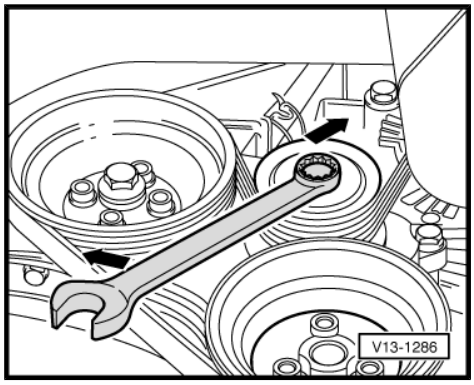

Note

When installing poly V-belt, ensure that belt seats correctly in pulleys.

1.3 Removing, installing and tensioning toothed belt

(Adjusting valve timing)

Special tools and workshop equipment required

- Support bracket -10 - 222 A-
- Rack -10 - 222 A /1-
- Torque wrench -V.A.G 1331-

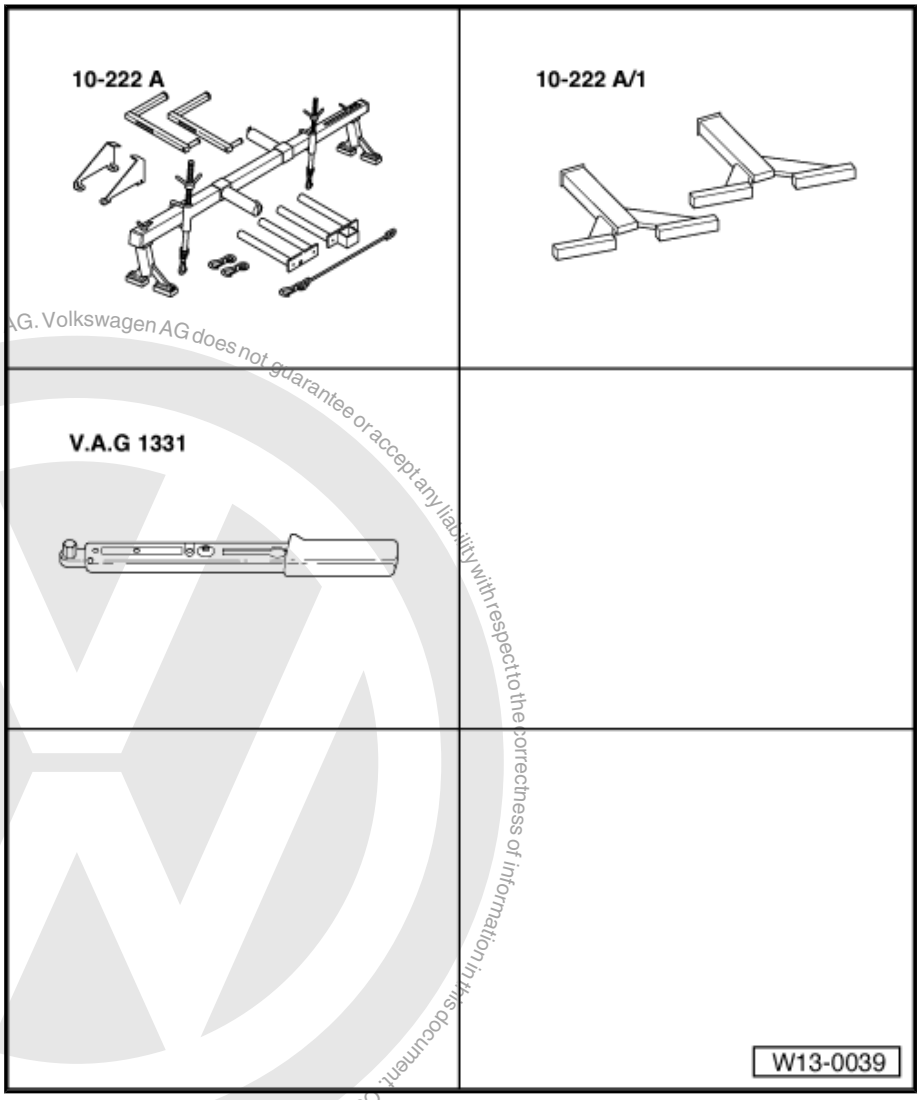

Protected by copyright. Copying for private or commercial purposes, in part or in whole, is not permitted unless authorised by Volkswagen AG. Volkswagen AG does not guarantee or accept any liability with respect to the correctness of information in this document. Copyright by Volkswagen AG.
satelettronica

1.3.1 Removing

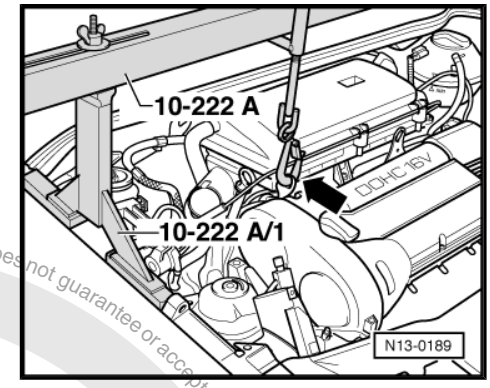

- Fit support bracket -10 - 222 A- with frame -10 - 222 A /1- as shown.
- Take up weight of engine and remove right engine mounting.
- Lower engine slightly.
- Remove poly V-belt ⇒ page 13 .
- Remove belt pulley and upper and lower section of belt guard.
- Mark direction of rotation of toothed belt.
- Loosen tensioning roller and remove toothed belt.

1.3.2 Installing

- The engine must be no more than warm to touch.
- The pistons must not be positioned at TDC.

Note

If a piston is at TDC, the valves could strike the piston when the camshaft turns.

Procedure

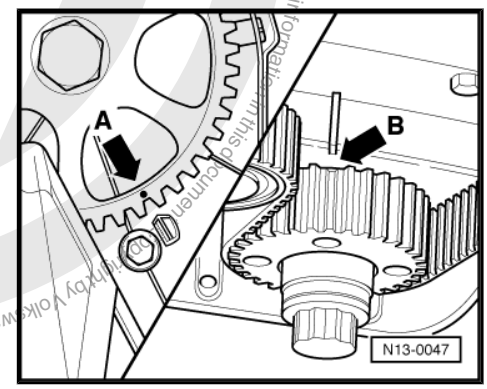

- Set camshaft pulley to mark -arrow A-.
- Set crankshaft to cyl. 1 TDC. The ground or offset tooth on the crankshaft belt pulley must match the mark on the sealing flange -arrow B-
- Fit toothed belt. Note direction of rotation with used belts.

Protected by copyright. Copying for private or commercial purposes, in part or in whole, is not permitted unless authorised by Volkswagen AG. Volkswagen AG does not guarantee or accept any liability with respect to the correctness of information in this document.
satelettronica

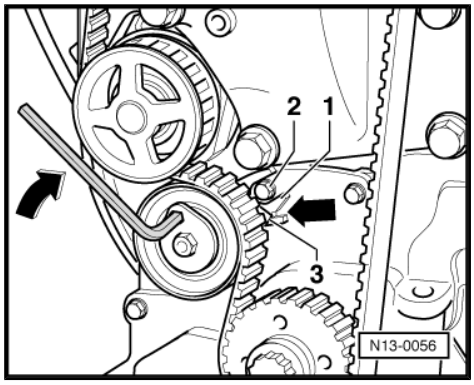

– Install tensioning roller and tighten securing nut hand-tight. The cut-out in the base plate -1- must engage over securing bolt -2-.
– Tension toothed belt by turning tensioning roller in direction of arrow until indicator -3- aligns with notch in base plate -arrow-.
– Tighten clamping nut on tensioning roller.

Specified torque: 20 Nm

– Now turn crankshaft two turns in engine direction of rotation until it is again at top dead centre No. 1 cylinder.
– Now the position of the toothed belt and tensioning roller must be checked again.
– Install upper and lower part of toothed belt guard.
– Install belt pulley (observe fixing).
– Install right engine mounting using new bolts ⇒ page 7 .
– Refit the poly V-belt and the cover.

Note

When installing poly V-belt, ensure that belt seats correctly in pulleys.

– Check ignition timing: ⇒ Engine - Mixture preparation; Rep. Gr. 28 ; Mono-Motronic Injection and Ignition system, Checking and adjusting ignition timing

1.4 Checking semi-automatic toothed belt tensioning roller

Protected by copyright. Copying for private or commercial purposes, in part or in whole, is not permitted unless authorised by Volkswagen AG. Volkswagen AG does not guarantee or accept any liability with respect to the correctness of information in this document. Copyright by Volkswagen AG.

satelettronica

Special tools and workshop equipment required

- Support bracket -10 - 222 A-
- Rack -10 - 222 A /1-
- Torque wrench -V.A.G 1331-

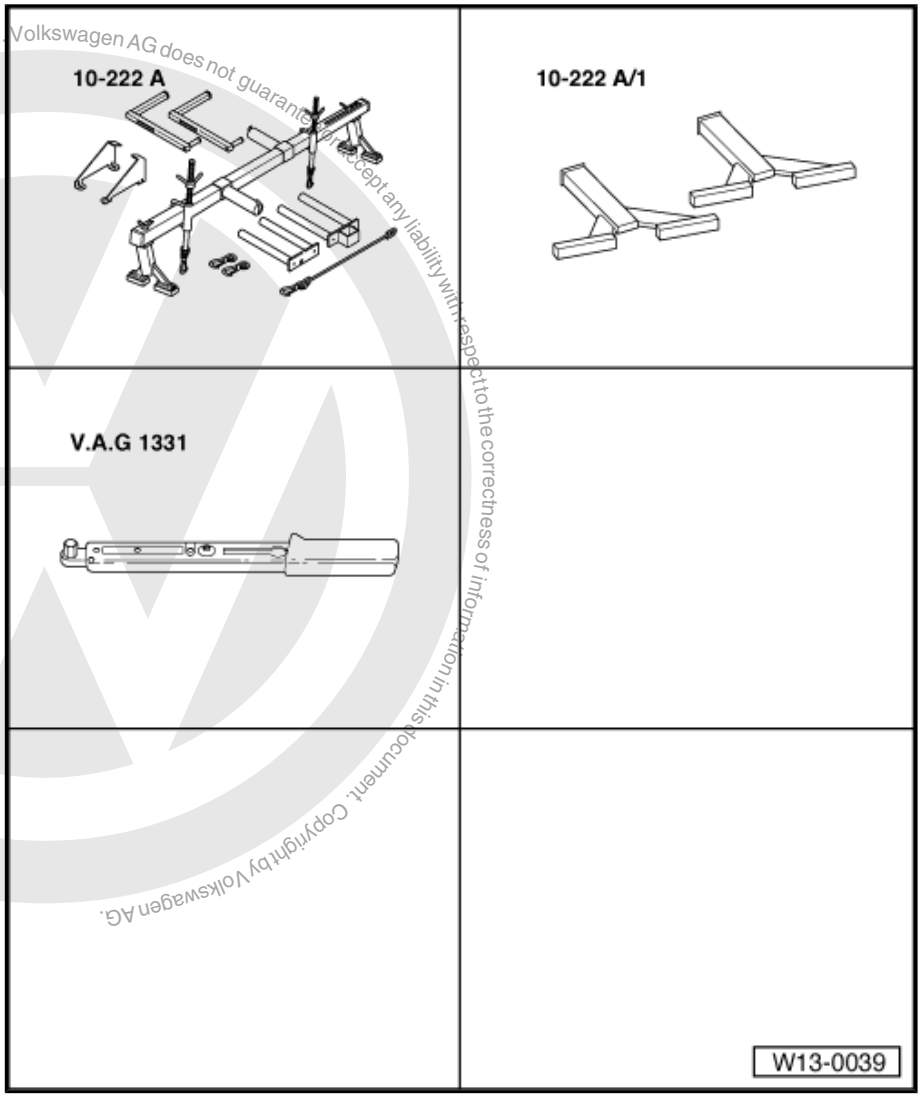

1.4.1 Test sequence

The engine must be lowered slightly as follows to enable the crankshaft belt pulley to be removed:

- Fit support bracket -10 - 222 A /1- with frame -10 - 222 A /1- as shown.
- Take up weight of engine and remove right engine mounting.
- Lower engine slightly.
- Remove poly V-belt ⇒ page 13 .
- Remove belt pulley and upper and lower section of belt guard.
- Now turn crankshaft two turns in engine direction of rotation until it is again at top dead centre No. 1 cylinder.

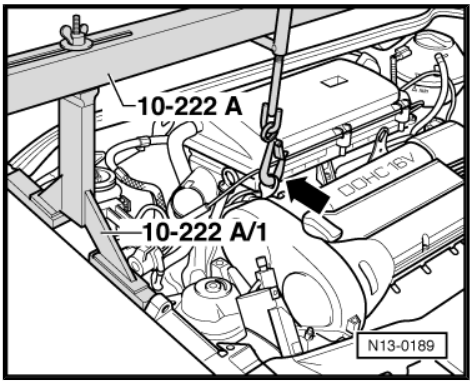

Protected by copyright. Copying for private or commercial purposes, in part or in whole, is not permitted unless authorised by Volkswagen AG. Volkswagen AG does not guarantee or accept any liability with respect to the correctness of information in this document. Copyright by Volkswagen AG.
satelettronica

– Note position of tensioning roller indicator -arrow-. Press toothed belt forcefully with thumb. The indicator must move.
– Release tension on toothed belt.
– Turn crankshaft two turns in engine direction of rotation.
– Then check position of indicator. It must have returned to its original position.

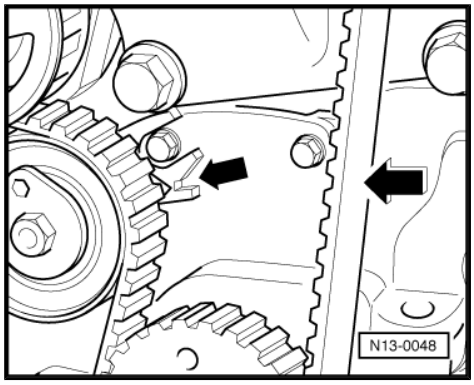

If tensioning roller does not return to its initial position

– Replace tensioning roller.

If tensioning roller is OK:

– Install belt pulley and upper and lower part of toothed belt guard.
– Install right engine mounting using new bolts ⇒ page 7 .
– Refit the poly V-belt and the cover.

Note

When installing poly V-belt, ensure that belt seats correctly in pulleys.

Protected by copyright. Copying for private or commercial purposes, in part or in whole, is not permitted unless authorised by Volkswagen AG. Volkswagen AG does not guarantee or accept any liability with respect to the correctness of information in this document. Copyright by Volkswagen AG.

satelettronica

2 Dismantling and assembling cylinder block, crankshaft and flywheel

2.1 Cast iron cylinder block

Aluminium cylinder block ⇒ page 20

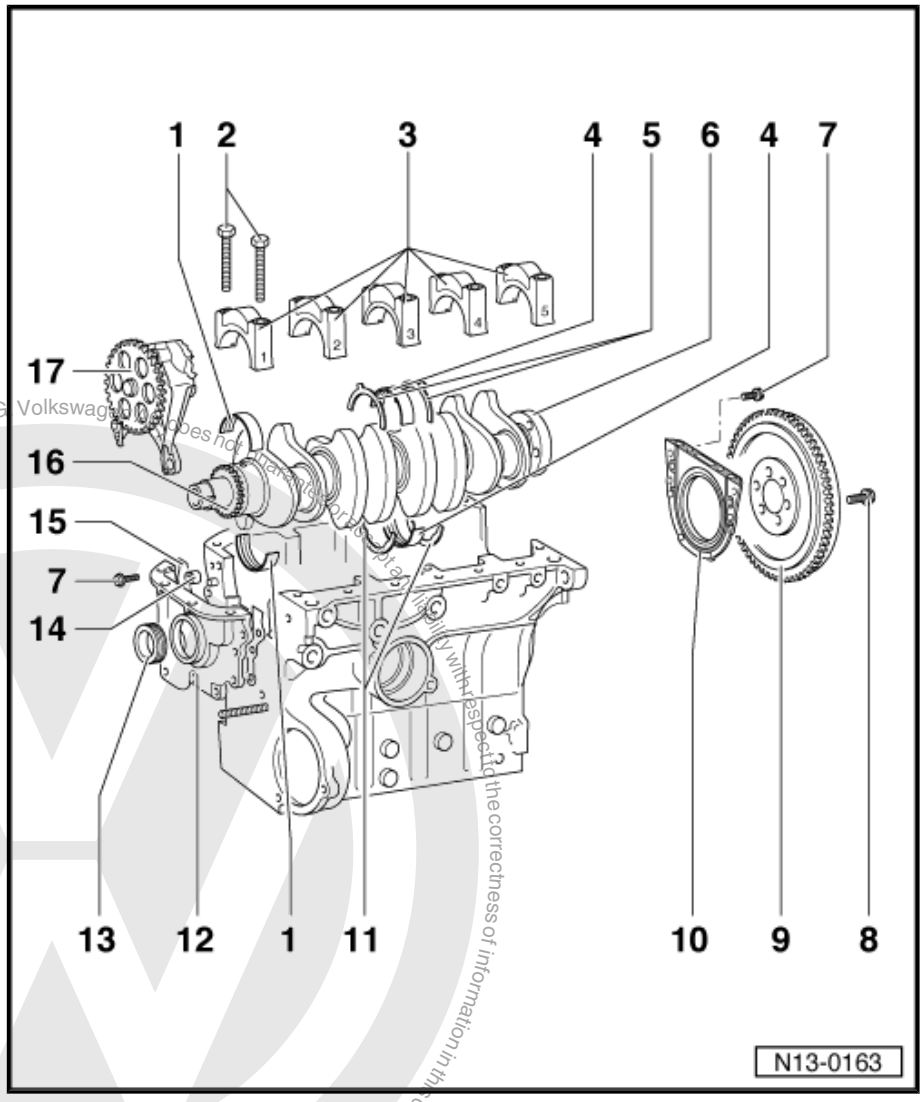

1 - Bearing shells 1, 2, 4 and 5

- ❑ Do not interchange used bearing shells (mark positions)

2 - 65 Nm

3 - Bearing cap

- ❑ Bearing cap 1: Pulley end
- ❑ Bearing cap 3 with recesses for thrust washers
- ❑ Bearing shell retaining lugs in cylinder block and bearing caps must align.

4 - Bearing shell 3

5 - Thrust washer

- ❑ For bearing cap 3
- ❑ Note fixing arrangement

6 - Crankshaft

- ❑ Axial clearance new: 0.07…0.24 mm, wear limit 0.26 mm
- ❑ Check radial clearance with Plastigage, new: 0.02 ... 0.07 mm; wear limit: 0.13 mm
- ❑ Do not rotate crankshaft when checking radial clearance
- ❑ Crankshaft dimensions ⇒ page 25

7 - 10 Nm

- ❑ 8 Nm for vehicles with a Duocentric oil pump

8 - 60 Nm + 1/4 turn (90 °) further

- ❑ Renew

9 - Flywheel

- ❑ Lock with counterhold -10 - 201- to remove or install.

10 - Sealing flange with oil seal

- ❑ Only renew complete
- ❑ Do not additionally oil sealing lip of spare part sealing flange
- ❑ The spare part sealing flange does not have a sprayed-on gasket and must be installed along with an additional gasket.
- ❑ Fit spare part sealing flange with supplied sleeve

Protected by copyright. Copying for private or commercial purposes, in part or in whole, not permitted unless authorised by Volkswagen AG. Volkswagen AG does not guarantee or accept any liability with respect to the correctness of information in this document. Copyright by Volkswagen AG.
satelettronica

11 - Thrust washer

- ❑ For cylinder block, bearing 3

12 - Sealing flange/Duocentric oil pump

- ❑ Removing and installing Duocentric oil pump ⇒ page 62

13 - Seal

- ❑ Renewing ⇒ page 22

14 - Sealing bush

- ❑ Only with chain driven oil pump
- ❑ Renew if damaged
- ❑ First insert in sealing flange
- ❑ Oil when installing

15 - Seal

- ❑ Renew

16 - Sprocket

- ❑ For oil pump drive

17 - Oil pump

- ❑ Removing and installing ⇒ Item 25 (page 57)
- ❑ Removing and installing on vehicles with Duocentric oil pump ⇒ page 62 .

2.2 Aluminium cylinder block

WARNING

The crankshaft must not be removed. Just loosening the main bearing caps will cause deformation of the cylinder block bearing pedestals. This deformation will cause a reduction of the bearing clearance. Even if the bearing shells are not renewed, bearing damage could occur due to a different bearing clearance.

If the bearing cap bolts are loosened, the cylinder block must be replaced complete with the crankshaft.

Measuring the main bearing clearance is not possible with workshop equipment.

Protected by copyright. Copyright by Volkswagen AG.
Copying for private or commercial purposes, in part or in whole, is not permitted unless authorised by Volkswagen AG. Volkswagen AG does not guarantee or accept any liability with respect to the correctness of information in this document.
satelettronica

1 - Seal
- ❑ Renewing ⇒ page 22

2 - Sealing flange

3 - Seal
- ❑ Renew

4 - Sealing bush
- ❑ Only with chain driven oil pump
- ❑ Renew if damaged
- ❑ First insert in sealing flange
- ❑ Oil when installing

5 - Oil pump
- ❑ Removing and installing ⇒ Item 25 (page 57)
- ❑ Removing and installing on vehicles with Duo-centric oil pump ⇒ page 62 .

6 - Aluminium cylinder block

7 - Sealing flange with oil seal
- ❑ Only renew complete
- ❑ Do not additionally oil sealing lip of spare part sealing flange
- ❑ The spare part sealing flange does not have a sprayed-on gasket and must be installed along with an additional gasket.
- ❑ Fit spare part sealing flange with supplied sleeve

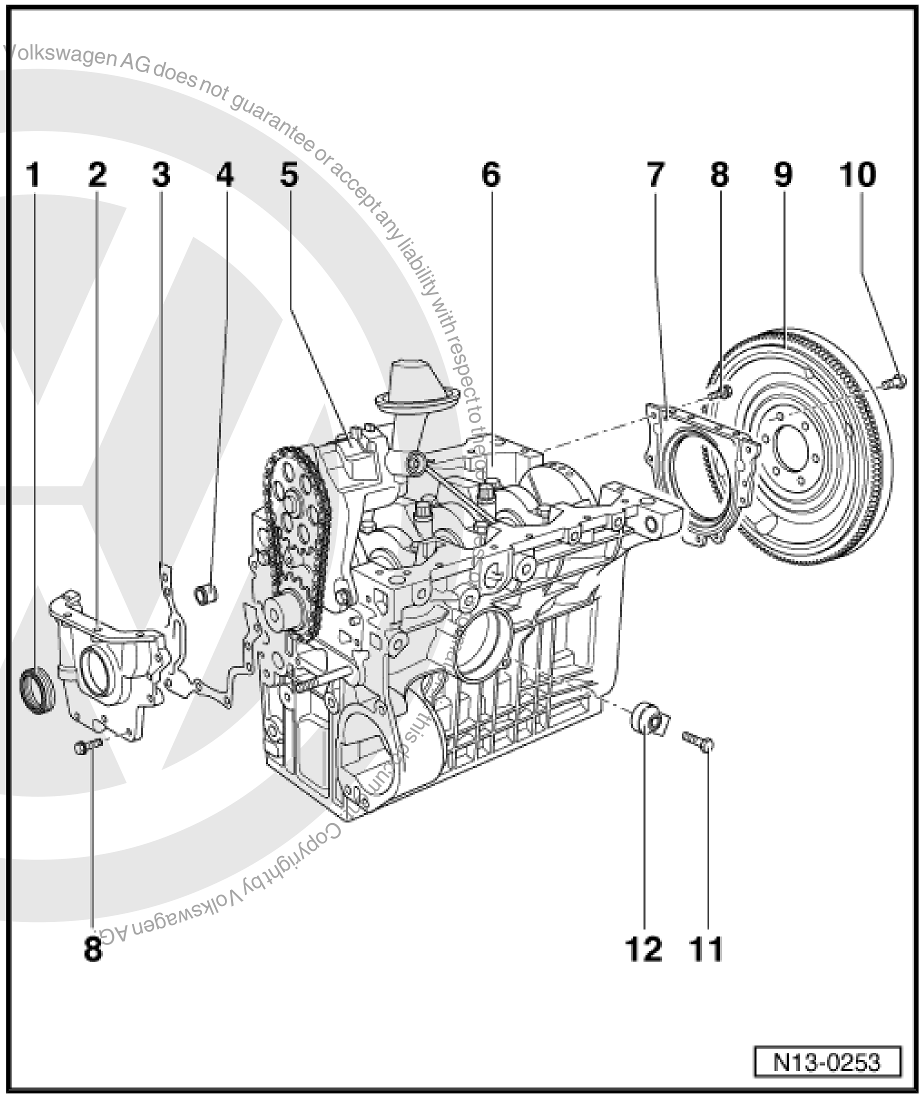

8 - 12 Nm
- ❑ Renew

9 - Flywheel
- ❑ Lock with counterhold -10 - 201- to remove or install.

10 - 60 Nm + $^1/_4$ turn (90 °) further
- ❑ Renew

11 - 20 Nm
- ❑ The specified torque influences the function of the knock sensor

12 - Knock sensor

Protected by copyright. Copying for private or commercial purposes, in part or in whole, is not permitted unless authorised by Volkswagen AG. Volkswagen AG does not guarantee or accept any liability with respect to the correctness of information in this document. Copyright by Volkswagen AG.
satelettronica

2.3 Renewing crankshaft oil seal - belt pulley end

Vehicles with chain driven oil pump, vehicles with Duocentric oil pump ⇒ page 23

2.3.1 Tools

Special tools and workshop equipment required

- Support bracket -10 - 222 A-
- Rack -10 - 222 A /1-
- Oil seal fitting tool -3083-
- Oil seal extractor -2085-
- Counterhold -3415- or Counterhold tool for toothed belt pulley -3099-
- Torque wrench -V.A.G 1331-
- Torque wrench -V.A.G 1332-

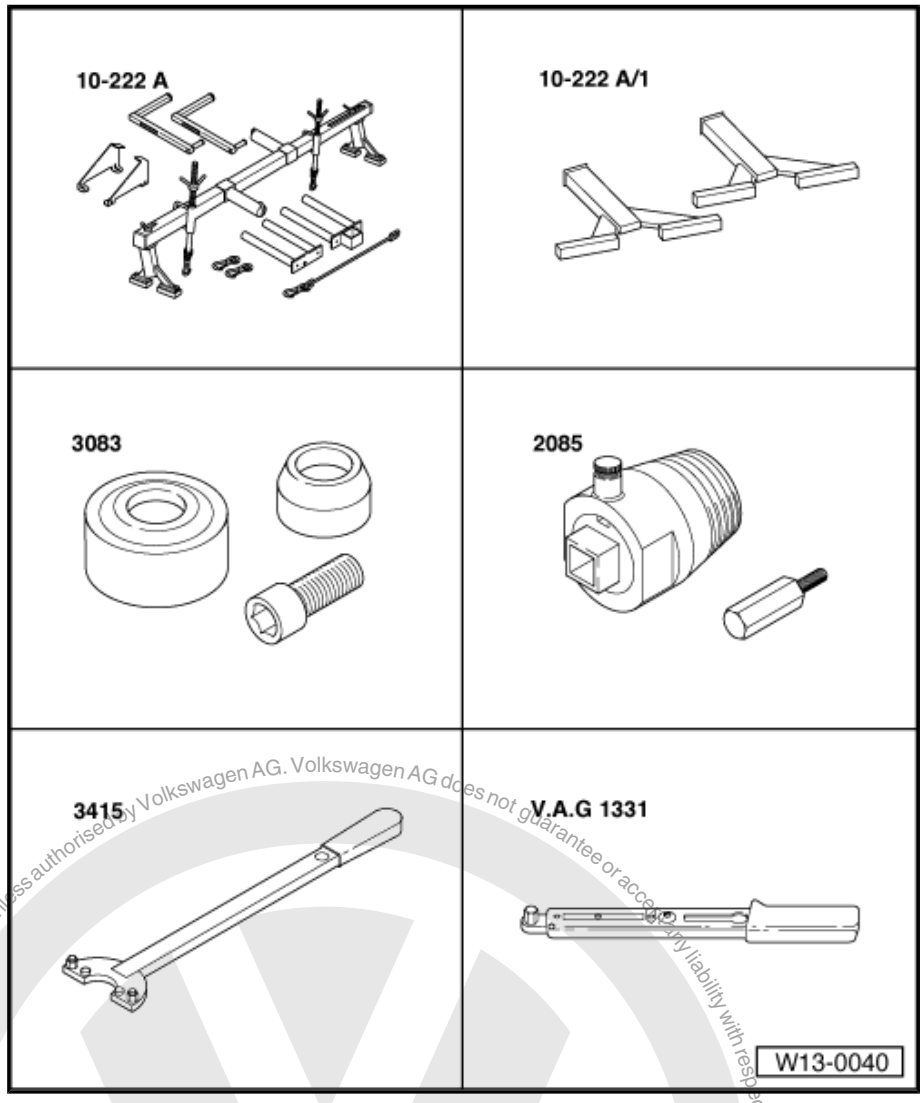

Torque wrench -V.A.G 1332-

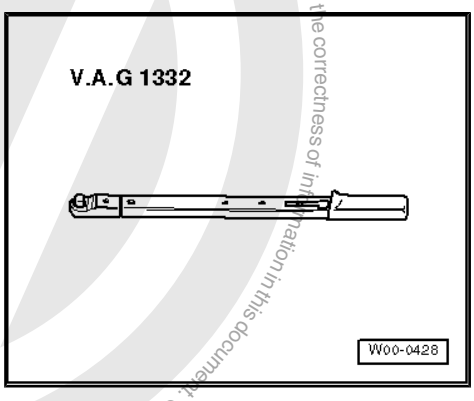

Protected by copyright. Copying for private or commercial purposes, in part or in whole, is not permitted unless authorised by Volkswagen AG. Volkswagen AG does not guarantee or accept any liability with respect to the correctness of information in this document. Copyright by Volkswagen AG.
satelettronica

2.3.2 Removing

- First remove toothed belt ⇒ page 14 .
- Then remove crankshaft toothed belt pulley. To do this, attach the Counterhold -3415- or Counterhold tool for toothed belt pulley -3099- to the belt pulley.
- To guide oil seal extractor -2085- , screw crankshaft toothed belt pulley securing bolt into crankshaft to stop.
- Screw inner part of oil seal extractor -2085- two turns (approx. 3 mm) out of outer part and lock with knurled screw.
- Lubricate threaded head of oil seal extractor -2085- , place it in position and exerting firm pressure, screw it as far as possible into oil seal.
- Loosen knurled screw and turn inner part against crankshaft until the oil seal is pulled out.

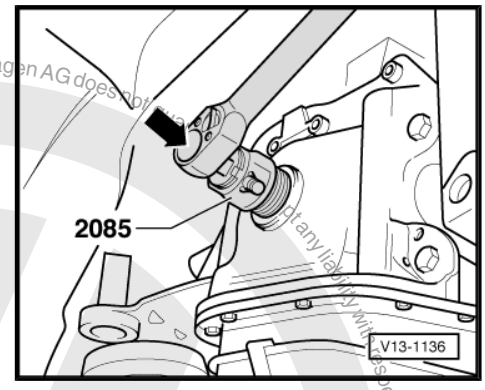

2.3.3 Installing

- Lightly oil sealing lip of oil seal.
- Position guide sleeve from oil seal fitting tool -3083- onto crankshaft journal.
- Slide oil seal over guide sleeve.
- Press oil seal out of oil seal fitting tool -3083- and in flush using a press sleeve.
- Install toothed belt ⇒ page 14 .

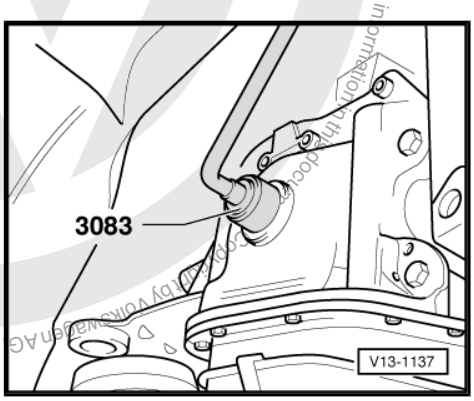

2.4 Vehicles with Duocentric oil pump

2.4.1 Tools

Protected by copyright. Copying for private or commercial purposes, in part or in whole, is not permitted unless authorised by Volkswagen AG. Volkswagen AG does not give any liability with respect to the correctness of information in this document. Copyright by Volkswagen AG
satelettronica

Special tools and workshop equipment required

- Oil seal extractor -3240-
- Assembly tool -T10022-
- Thrust piece -T10022/1-
- Spindle -T10022/2-
- Counterhold tool for toothed belt sprocket -3099-

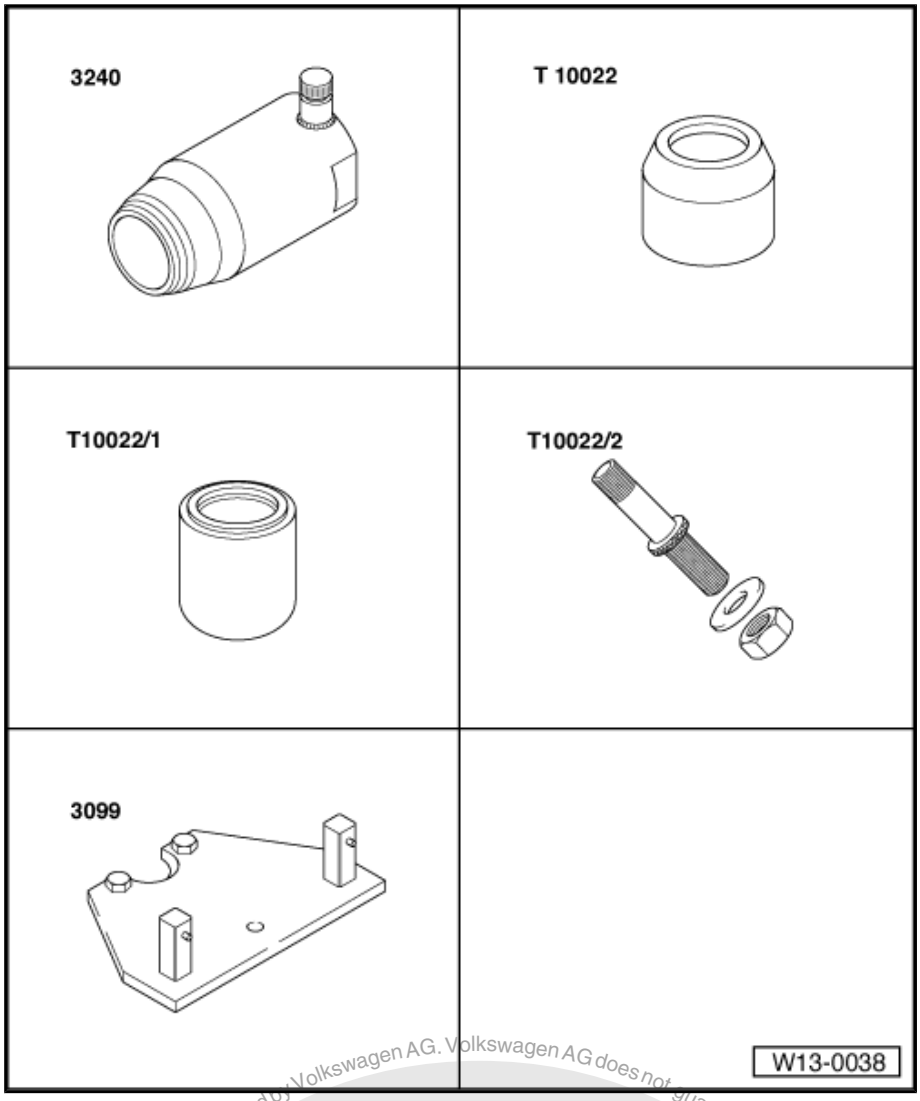

2.4.2 Removing

– First remove toothed belt ⇒ page 14 .

– Then remove crankshaft toothed belt pulley. To do this, attach counterhold -3415- to toothed belt pulley.

– To guide oil seal extractor -3240-, screw crankshaft toothed belt pulley securing bolt into crankshaft to stop.

– Screw inner part of oil seal extractor -3240- two turns (approx. 3 mm) out of outer part and lock with knurled screw.

– Lubricate threaded head of oil seal extractor -3240- , place it in position and exerting firm pressure, screw it as far as possible into oil seal.

– Loosen knurled screw and turn inner part against crankshaft until the oil seal is pulled out.

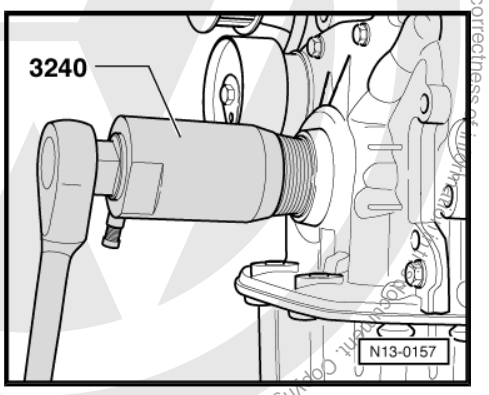

satelettronica
Protected by copyright. Copying for private or commercial purposes, in part or in whole, is not permitted unless authorised by Volkswagen AG. Volkswagen AG does not guarantee or accept any liability with respect to the correctness of information. Copyright by Volkswagen AG.

2.4.3 Installing

– Lightly oil sealing lip of oil seal.
– Fit assembly tool -T10022- onto crankshaft journal and turn spindle -T10022/2- in to stop.
– Slide oil seal over guide sleeve.

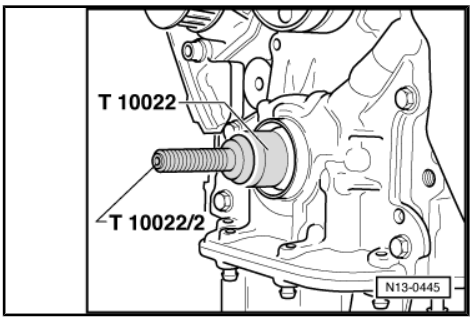

– Press in oil seal to stop with press piece -T10022/1- .
– Install toothed belt ⇒ page 14 .
– Install crankshaft toothed belt pulley and lock with counterhold tool for toothed belt sprocket -3099- .

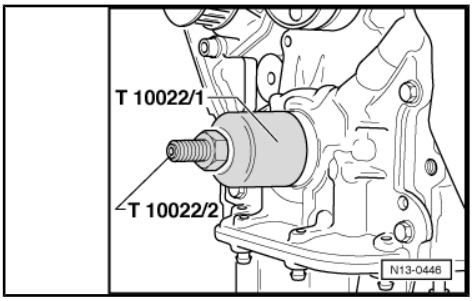

2.5 Crankshaft dimensions

Honing dimension in mm	Crankshaft main bearing journal ∅	Conrod journal ∅ engine code	
		AER, AEV, ALL	ADX, AEA, AEE, AEX, AKV, ANX, APQ
Basic dimension	-0.017 54.00 -0.037	-0.022 42.00 -0.037	-0.022 47.80 -0.037
Stage I	-0.017 53.75 -0.037	-0.022 41.75 -0.037	-0.022 47.55 -0.037
Stage II	-0.017 53.50 -0.037	-0.022 41.50 -0.037	-0.022 47.30 -0.037
Stage III	-0.017 53.25 -0.037	-0.022 41.25 -0.037	-0.022 47.05 -0.037

Protected by copyright. Copying for private or commercial purposes, in part or in whole, is not permitted unless authorised by Volkswagen AG. Volkswagen AG does not guarantee or accept any liability with respect to the correctness of information in this document. Copyright by Volkswagen AG.
satelettronica

3 Dismantling and assembling pistons and conrods

Protected by copyright. Copying for private or commercial purposes, in part or in whole, is not permitted unless authorised by Volkswagen AG. Volkswagen AG does not guarantee or accept any liability with respect to the correctness of information in this document. Copyright by Volkswagen AG.

3.1 Engine code

Engine codes AER, ALL ⇒ page 27

Engine code AEV ⇒ page 28

3.1.1 Engine codes ADX, AEA, AEE, AEX, AKV, ANX, APQ

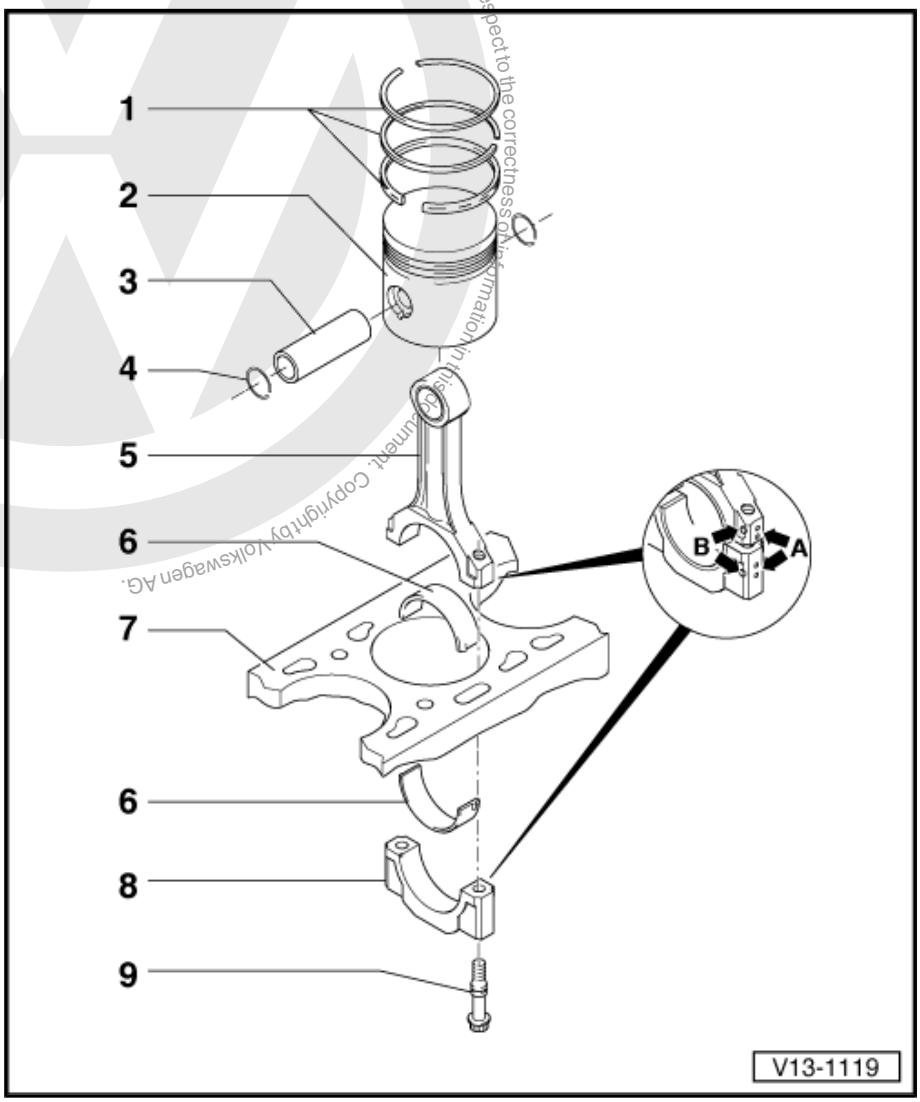

1 - Piston rings
- ❑ Offset gaps by 120°.
- ❑ Remove and install using piston ring pliers
- ❑ Carefully remove and install 3-part oil scraper rings by hand.
- ❑ "TOP" faces towards piston crown
- ❑ Checking ring gap ⇒ page 29 .
- ❑ Checking ring-to-groove clearance ⇒ page 29 .

2 - Piston
- ❑ Checking ⇒ page 30
- ❑ Mark installation position and cylinder number
- ❑ Arrow on piston crown points to pulley end
- ❑ Install using piston ring clamp

3 - Piston pin
- ❑ If difficult to remove, heat piston to 60 °C
- ❑ Remove and install with drift -10 - 14- .

4 - Locking ring

5 - Conrod
- ❑ Renew as set only.
- ❑ Mark with cylinder number -A-.
- ❑ Installation position: Marking -B- faces towards belt pulley end
- ❑ Guided axially by piston.

6 - Bearing shell
- ❑ Insert bearing shells centrally
- ❑ Do not interchange used bearing shells
- ❑ Measuring preload ⇒ page 31
- ❑ Checking radial clearance with Plastigage:

♦ New: 0.020…0.061 mm

satelettronica

- Wear limit: 0.091 mm
  - Do not rotate crankshaft when checking radial clearance

7 - Cylinder block

- Checking cylinder bores ⇒ page 30
- Piston and cylinder dimensions ⇒ page 31

8 - Conrod bearing cap

- Observe installation position
- Due to the cracking method used to separate the bearing cap from the conrod in manufacture, the caps only fit in one position and only on the appropriate conrod.

9 - Condor bolt M8: 30 Nm + 90° (1/4 turn) further; M7: 20 Nm + 90° (1/4 turn) further

- Renew
- Oil threads and contact surface
- To measure radial clearance, tighten to 20 or 30 Nm but do not turn further.

3.1.2 Engine codes AER, ALL

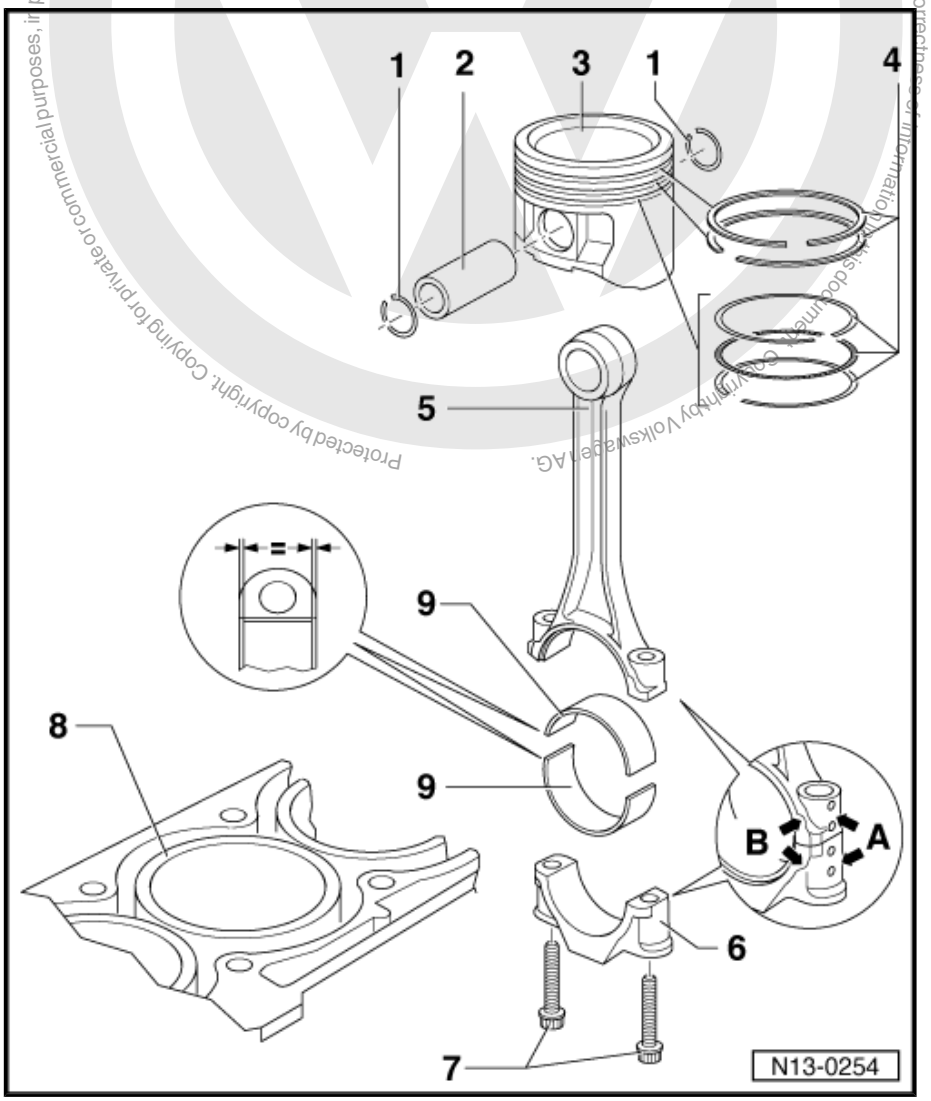

1 - Locking ring

2 - Piston pin

- If difficult to remove, heat piston to 60 °C
- Remove and install with drift -10 - 14- .

3 - Piston

- Checking ⇒ page 30
- Mark installation position and cylinder number
- Arrow on piston crown points to pulley end
- Install using piston ring clamp

4 - Piston rings

- Offset gaps by 120°.
- Remove and install compression rings with piston ring pliers.
- Carefully remove and install 3-part oil scraper rings by hand.
- "TOP" faces towards piston crown
- Checking ring gap ⇒ page 29 .
- Checking ring-to-groove clearance ⇒ page 29 .

5 - Conrod

- Renew as set only.
- Mark with cylinder number -A-.
- Installation position: Marking -B- faces towards belt pulley end
- Guided axially by piston.

Protected by copyright. Copying for private or commercial purposes, in part or whole, is only permitted with the express consent of Volkswagen AG. Volkswagen AG does not guarantee or accept any liability with respect to the correctness of information in this document. Copyright by Volkswagen AG.
satelettronica

6 - Conrod bearing cap

- ❑ The caps only fit in one position and only on the appropriate conrod, this is due to the breaking procedure (cracking) separating the cap from the conrod

7 - Conrod bolt, 20 Nm + 1/4 turn (90°) further

- ❑ Renew
- ❑ Oil threads and contact surface
- ❑ To measure radial clearance, tighten to 20 Nm but not further.

8 - Cylinder block

- ❑ Checking cylinder bores ⇒ page 30
- ❑ Piston and cylinder dimensions ⇒ page 31

9 - Bearing shell

- ❑ Do not interchange used bearing shells
- ❑ Measuring preload ⇒ page 31
- ❑ Insert bearing shells centrally
- ❑ Check radial clearance with Plastigage: new: 0.020…0.061 mm, wear limit: 0.091 mm. Do not rotate crankshaft when checking radial clearance.

3.1.3 Engine code AEV

1 - Piston rings

- ❑ Offset gaps by 120°.
- ❑ Remove and install using piston ring pliers
- ❑ "TOP" faces towards piston crown
- ❑ Checking ring gap ⇒ page 29 .
- ❑ Checking ring-to-groove clearance ⇒ page 29

2 - Piston

- ❑ Checking ⇒ page 30
- ❑ Mark installation position and cylinder number
- ❑ Arrow on piston crown points to pulley end
- ❑ Install using piston ring clamp

3 - Conrod

- ❑ Renew as set only.
- ❑ Mark with cylinder number -A-.
- ❑ Installation position: Marking -B- faces towards belt pulley end

4 - Conrod bearing cap

- ❑ Observe installation position

5 - 30 Nm + 1/4 turn (90 °) further

- ❑ Oil threads and contact

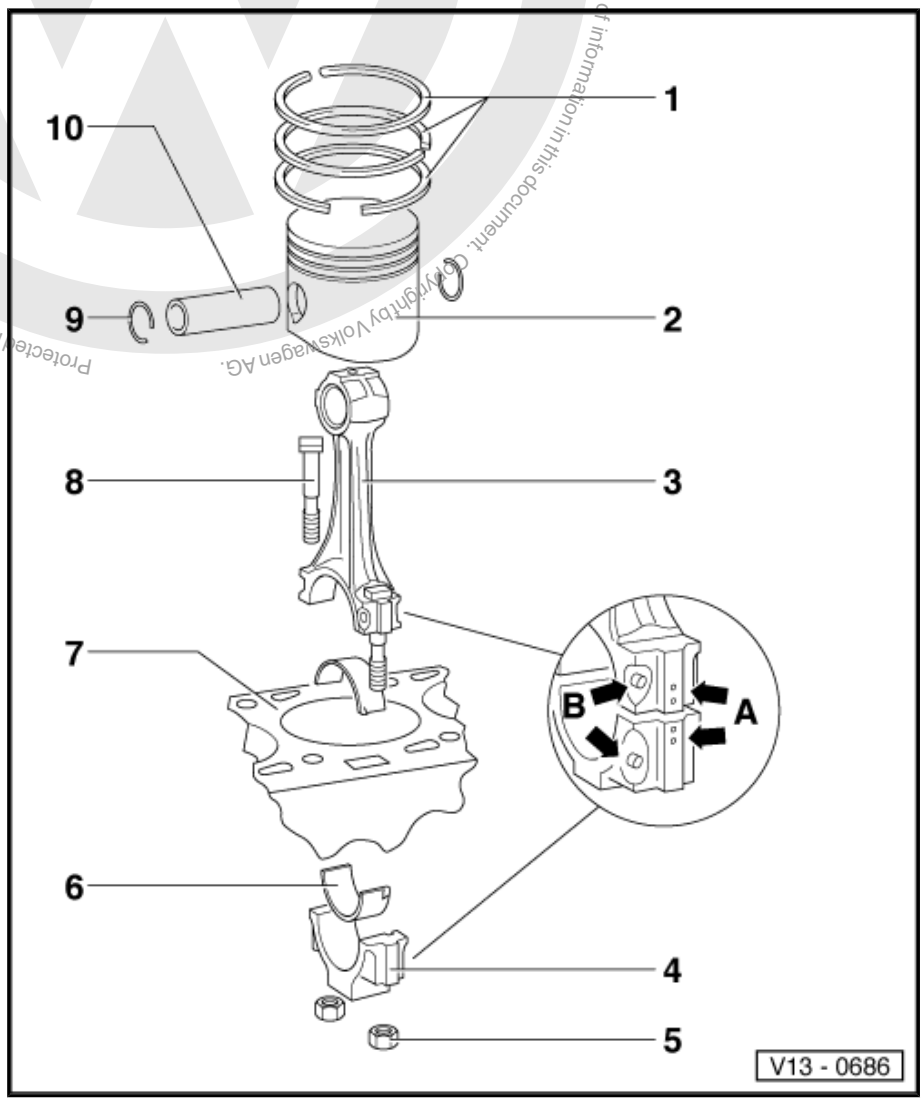

Protected by copyright. Copying for private or commercial purposes, in part or in whole, is not permitted unless authorised by Volkswagen AG. Volkswagen AG does not guarantee or accept any liability with respect to the correctness of information in this document. Copyright by Volkswagen AG.
satelettronica

surface

- ❑ To measure radial clearance, tighten to 30 Nm but not further.

6 - Bearing shell

- ❑ Observe installation position
- ❑ Do not interchange used bearing shells
- ❑ Ensure retaining lug fits tightly in recess, measure preload for this ⇒ page 31
- ❑ Axial clearance new: 0.05…0.31 mm, wear limit 0.40 mm
- ❑ Check radial clearance with Plastigage: new: 0.010…0.047 mm, wear limit: 0.091 mm. Do not rotate crankshaft when checking radial clearance.

7 - Cylinder block

- ❑ Checking cylinder bores ⇒ page 30
- ❑ Piston and cylinder dimensions ⇒ page 31

8 - Conrod bolt

- ❑ Renew

9 - Locking ring

10 - Piston pin

- ❑ If difficult to remove, heat piston to 60 °C
- ❑ Remove and install with drift -VW 222 A-

3.1.4 Checking piston ring gap

– Push ring squarely from above down to approx. 15 mm from bottom end of cylinder.

Piston ring	Wear limit
Compression rings	1.0 mm
Oil scraper ring 1 part 3 parts	1.0 mm ---[5]

5) No wear limit details

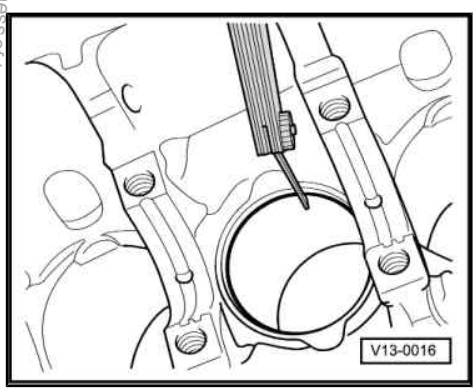

3.1.5 Checking ring-to-groove clearance

Clean groove before check.

Piston ring	Wear limit
Compression rings	0.15 mm
Oil scraper ring 1 part 3 parts	0.15 mm Not measurable

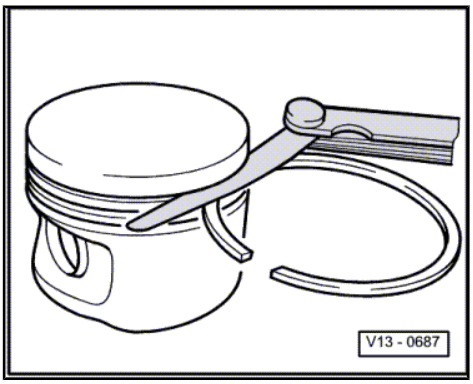

Protected by copyright. Copying for private or commercial purposes, in part or in whole, is not permitted unless authorised by Volkswagen AG. Volkswagen AG does not guarantee or accept any liability with respect to the correctness of information in this document. Copyright by Volkswagen AG.
satelettronica

3.1.6 Checking piston

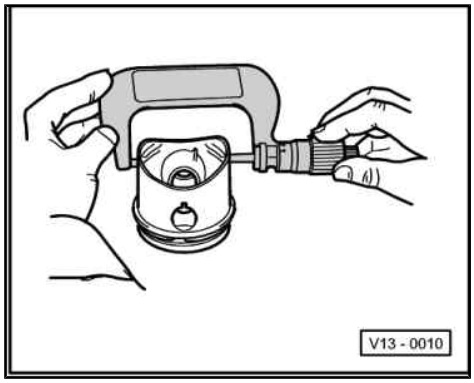

Special tools and workshop equipment required

- ♦ Micrometer 75…100 mm
- – Measure pistons approx. 10 mm from the lower edge of skirt, at 90° to the piston pin axis. Deviation from nominal dimension max. 0.04 mm

3.1.7 Checking cylinder bores

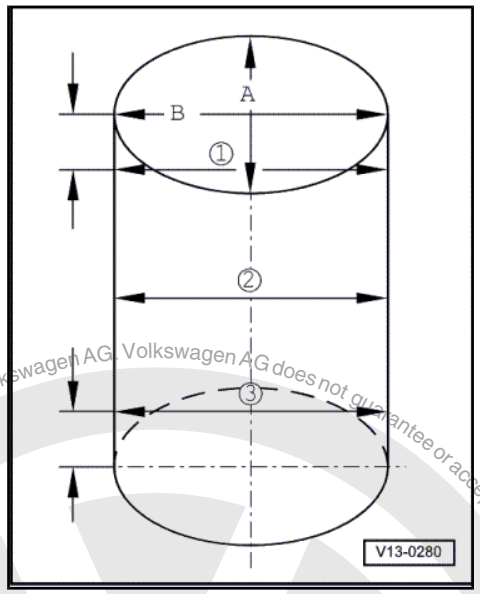

Special tools and workshop equipment required

- ♦ Cylinder gauge 50..100 mm
- – Take measurements at 3 positions in both lateral -A-and longitudinal -B- directions. Deviation from nominal dimension max. 0.08 mm

Note

Cylinder bores must not be measured when cylinder block is mounted on a repair stand with engine and gearbox support -VW 540- , as measurements may then be incorrect.

Protected by copyright. Copying for private or commercial purposes, in part or in whole, is not permitted unless authorised by Volkswagen AG. Volkswagen AG does not guarantee or accept any liability with respect to the correctness of information in this document. Copyright by Volkswagen AG.
satelettronica

3.1.8 Measuring preload of bearing shells

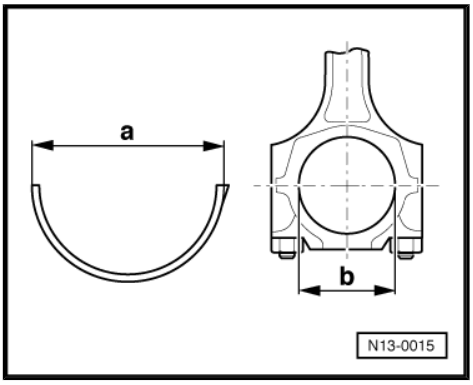

Special tools and workshop equipment required

- Vernier gauge

The bearing shell preload is calculated as follows:

Bearing shell dimension -a- - conrod diameter -b- = preload

Minimum dimension:

- Engine codes: ADX, AEA, AEE, AER, AEX, AKV, ALL, ANX, APQ: 1.5 mm
- Engine code AEV: 0.5 mm

If the preload is not reached:

– Renew bearing shell.

3.2 Piston and cylinder dimensions

3.2.1 Engine codes ADX, AEA, AEE, AEX, AKV, ANX, APQ

Honing dimension		Piston-∅[1)]	Cylinder bore ∅
Basic dimension	mm	76.470	76.51
Stage I	mm	76.720	76.76
Stage II	mm	76.970	77.01
Stage III	mm	77.220	77.26

3.2.2 Engine codes AER, ALL

Honing dimension		Piston ∅	Cylinder bore ∅
Basic dimension	mm	67.085	67.11
Stage I	mm	67.335	67.36
Stage II	mm	67.585	67.61
Stage III	mm	67.835	67.86

The dimensions are for an uncoated piston. Pistons with a coating in the area of the measurements may be up to 0.030 mm ∅ larger depending on mileage/life of engine.

3.2.3 Engine code AEV

Honing dimension		Piston ∅	Cylinder bore ∅
Basic dimension	mm	74.985	75.01

satelettronica
Protected by copyright. Copying for private or commercial purposes, in part or in whole, is not permitted unless authorised by Volkswagen AG. Volkswagen AG does not guarantee or accept any liability with respect to the correctness of information in this document. Copyright by Volkswagen AG.

Honing dimension		Piston ∅	Cylinder bore ∅
Stage I	mm	75.235	75.26
Stage II	mm	75.485	75.51
Stage III	mm	75.735	75.76

Protected by copyright. Copying for private or commercial purposes, in part or in whole, is not permitted unless authorised by Volkswagen AG. Volkswagen AG does not guarantee or accept any liability with respect to the correctness of information in this document. Copyright by Volkswagen AG.
satelettronica

15 – Cylinder head, valve gear

1 Cylinder head, valve gear

1.1 Assembly overview - cylinder head

Checking compression ⇒ page 39 .

Note

- *When installing an exchange cylinder head with fitted camshaft, the contact surfaces between the bucket tappets and the cam must be oiled before installing the cylinder head cover.*
- *The plastic packing pieces for protecting the open valves must not be removed until immediately before fitting the cylinder head.*
- *If the cylinder head is renewed, all the coolant in the system must also be renewed.*

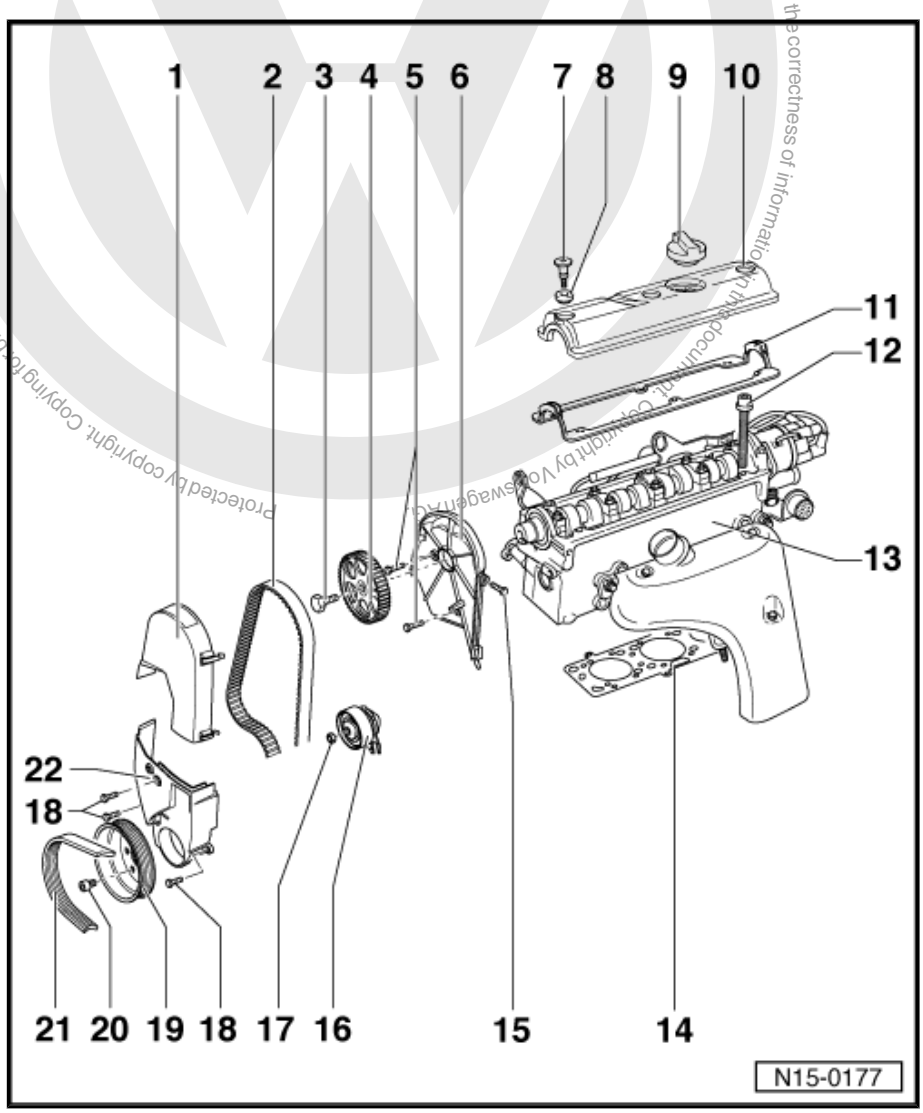

1 - Toothed belt guard upper part

2 - Toothed belt

- ❑ Check for wear
- ❑ Do not kink
- ❑ Removing, installing and tensioning ⇒ page 14

3 - 20 Nm + 1/4 turn (90 °) further

- ❑ Renew

4 - Camshaft pulley

- ❑ Note position when installing toothed belt ⇒ page 14 .

5 - 10 Nm

- ❑ Insert with locking fluid - D 000 600 A2- .

6 - Rear toothed belt guard

7 - 5 Nm + 1/4 turn (90 °) further

- ❑ Renew

8 - Sealing washer

- ❑ Renew

9 - Sealing cap

- ❑ Renew seal if damaged

10 - Cylinder head cover

11 - Cylinder head cover gasket

- ❑ Renew if damaged

Protected by copyright. Copying for private or commercial purposes, in part or in whole, is not permitted unless authorised by Volkswagen AG. Volkswagen AG does not guarantee or accept any liability with respect to the correctness of information in this document. Copyright by Volkswagen AG.
satelettronica

- ❑ Before fitting coat transition points between bearing cap and cylinder head with sealant -D 454 300 A2- .

12 - Cylinder head bolt

- ❑ Renew
- ❑ Engine codes ADX, AEA, AEE, AEX, AKV, ANX, APQ: bolt with knurled head
- ❑ Sequence when loosening and tightening ⇒ page 35 .

13 - Cylinder head

- ❑ Check for distortion ⇒ page 34
- ❑ Removing and installing ⇒ page 35
- ❑ After renewing, renew entire coolant

14 - Cylinder head gasket

- ❑ Renew
- ❑ Engine codes: ADX, AEA, AEE, AER, AEX, AKV, ALL, ANX, APQ: metal gasket
- ❑ After renewing, renew entire coolant

15 - 10 Nm

16 - Tensioning roller

- ❑ Removing, installing and tensioning ⇒ page 14

17 - 20 Nm

18 - 10 Nm

- ❑ For aluminium block: Renew bolts (coated with a sealant)

19 - Belt pulley

- ❑ When installing note fixing arrangement
- ❑ Note position when installing toothed belt ⇒ page 14 .

20 - 20 Nm

21 - Poly V-belt

- ❑ Mark direction of rotation before removing.
- ❑ Removing and installing ⇒ page 13

22 - Toothed belt guard lower part

Checking cylinder head for distortion

Max. permissible distortion: 0.05 mm

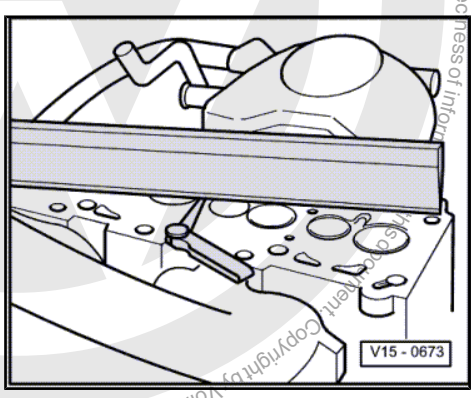

Protected by copyright. Copying for private or commercial purposes, in part or whole, is not permitted unless authorised by Volkswagen AG. Volkswagen AG does not guarantee or accept any liability with respect to the correctness of information. Copyright by Volkswagen AG.
satelettronica

1.2 Removing and installing cylinder head

1.2.1 Tools

Special tools and workshop equipment required

- Drip tray -V.A.G 1306-
- Hose clip pliers -V.A.G 1921-
- Support bracket -10 - 222 A-
- Feet for support bracket -10 - 222 A/1-
- Counterhold tool -3036-
- Torque wrench -V.A.G 1331-

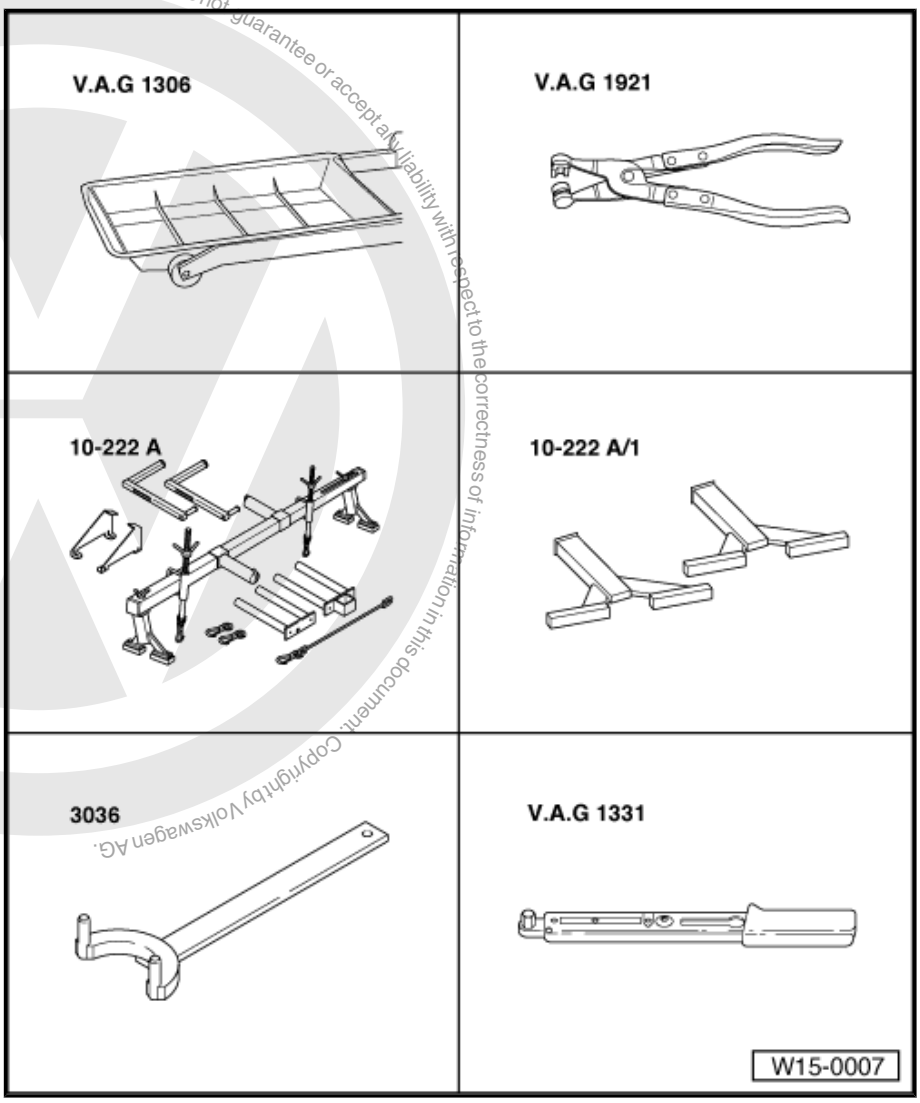

Protected by copyright. Copying for private or commercial purposes, in part or in whole, is not permitted unless authorised by Volkswagen AG. Volkswagen AG does not guarantee or accept any liability with respect to the correctness of information in this document. Copyright by Volkswagen AG.
satelettronica

- Engines with a cast iron cylinder block
- Torque wrench -V.A.G 1332-
- Guide pins -3070-
- Engines with an aluminium cylinder block
- Guide pins -3070-

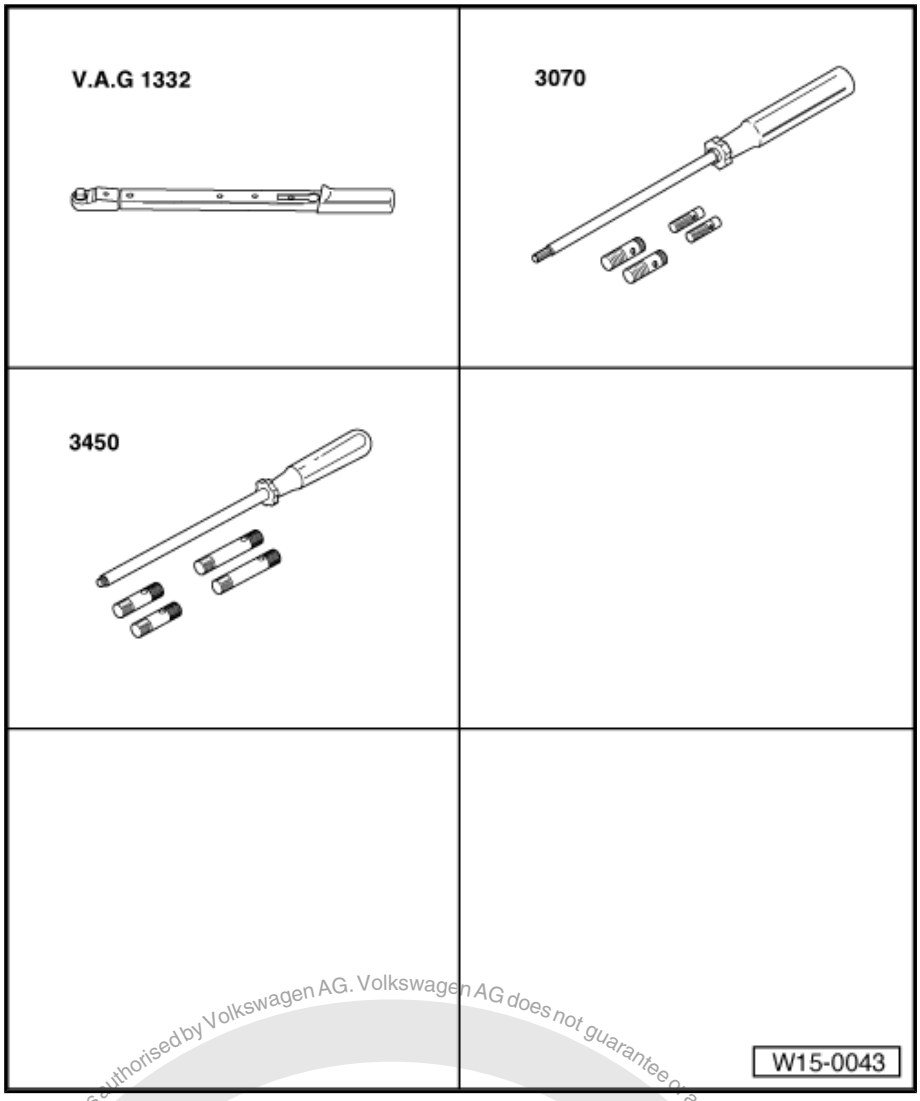

1.2.2 Removing

Prerequisites

- The engine must be no more than warm to touch.
- The pistons must not be positioned at TDC.

– First check whether a coded radio is fitted. If so, obtain anti-theft coding.

– With the ignition switched off, disconnect battery earth strap.

Protected by copyright. Copying for private or commercial purposes, in part or in whole, is not permitted unless authorised by Volkswagen AG. Volkswagen AG does not guarantee or accept any liability with respect to the correctness of information in this document. Copyright by Volkswagen AG.
satelettronica

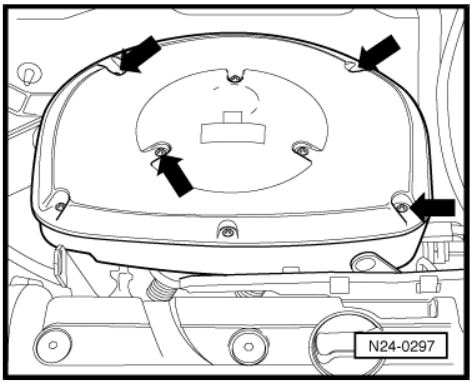

– Remove air filter. Remove bolts -arrows- as marked.
– Drain coolant ⇒ page 71 .
– Loosen hose clips and pull coolant hoses off coolant thermostat housing.
– Loosen or separate the following components:
♦ central connector
♦ accelerator cable
♦ high tension terminal 4 from ignition distributor
♦ hose to activated charcoal filter solenoid valve 1 -N80-
♦ vacuum hose from intake manifold to brake servo
♦ earth strap on retainer to ignition transformer
♦ 2-pin connector from knock sensor (rear of cylinder block)
– Now separate the fuel supply and return lines at the connection point on the suspension strut turret. The fuel system is pressurised. Therefore, wrap a cloth around connection before pulling hose off.
– Seal lines so that fuel system is not contaminated by dirt.

The engine must be lowered slightly as follows to enable the crankshaft belt pulley to be removed:

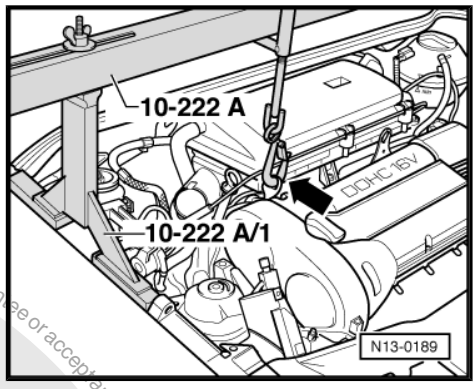

– Fit support bracket -10 - 222 A- with frame -10 - 222 A /1- as shown.
– Take up weight of engine and remove right engine mounting.
– Lower engine slightly.
– Remove cover for poly V-belt.
– Remove poly V-belt ⇒ page 13 .
– Remove front exhaust pipe from exhaust manifold.
– Remove belt pulley and upper and lower section of belt guard.
– Loosen toothed belt tensioning roller and remove toothed belt.
– Now lift engine again slightly and refit right engine support.
– Pull clamp securing coolant pipe to coolant pump off thermostat housing.
– Remove cylinder head cover.

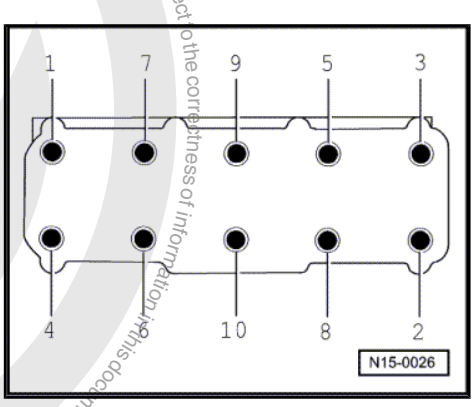

– Loosen cylinder head bolts in sequence given and then remove completely.
– Carefully remove cylinder head.

Protected by copyright. Copying for private or commercial purposes, in whole or in part, is permitted unless authorised by Volkswagen AG. Volkswagen AG does not guarantee or accept any liability with respect to the correctness of information in this document. Copyright by Volkswagen AG.
satelettronica

1.2.3 Installing

Note

- *Do not remove new cylinder head gasket from its packing until immediately before installing.*
- *Handle new gasket with extreme care. Damage will cause leakage.*

– Place clean cloths in cylinders so that no dirt or emery cloth particles can get in between cylinder wall and piston.

– Also prevent dirt and emery cloth particles from getting into coolant.

– Now carefully clean sealing surfaces of cylinder head and cylinder block. Ensure thereby that surfaces are not scored or scratched (if abrasive paper is used, grade must not be less than 100).

– Carefully remove metal particles, emery residue and cloths.

– Set No. 1 cylinder piston to top dead centre and then turn crankshaft back slightly.

– To centralise, screw guide pins -3070- or guide pins -3450- into rear outer cylinder head screw holes -arrows-.

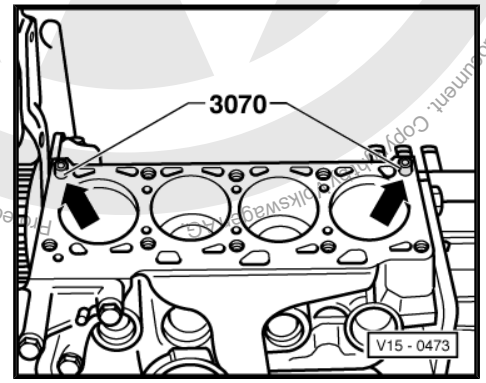

– Fit new cylinder head gasket. Lettering (Part No.) must be readable.

– Fit cylinder head, screw in 8 remaining cylinder head bolts and tighten by hand.

– Remove guide pins -3070- or guide pins -3450- through threaded holes with removal tool. To do this, turn removal tool anticlockwise, until the pins are free.

– Now insert last two cylinder head bolts and tighten them hand-tight also.

– Tighten cylinder head bolts in tightening sequence as follows:

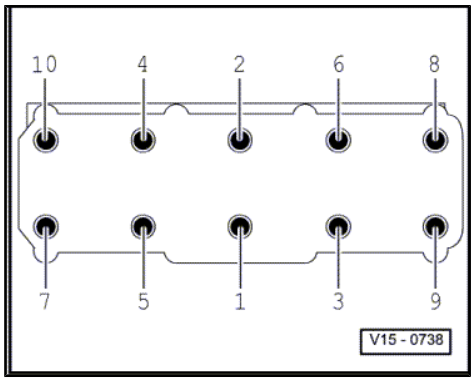

Engines with an aluminium cylinder block:

– Tighten all bolts to 30 Nm.

– Then tighten all bolts $^1/_4$ turn (90°) further using a rigid wrench.

– Then tighten all bolts again $^1/_4$ turn (90°) further.

Engines with a cast iron cylinder block:

– Pre-tighten all bolts to 40 Nm.

– Then tighten all bolts to 60 Nm.

– Then tighten all bolts $^1/_4$ turn (90°) further using a rigid wrench.

– Then tighten all bolts again $^1/_4$ turn (90°) further.

Further assembly is basically a reverse of the dismantling procedure.

How to install toothed belt and adjust valve timing ⇒ page 14 .

Filling with new coolant ⇒ page 71 .

Protected by copyright. Copyright for parts or complete reproduction of this document is not permitted unless authorised by Volkswagen AG. Volkswagen AG does not guarantee or accept any liability with respect to the correctness of information in this document. Copyright by Volkswagen AG.
satelettronica

1.3 Checking compression

Special tools and workshop equipment required

- Compression tester -V.A.G 1763-

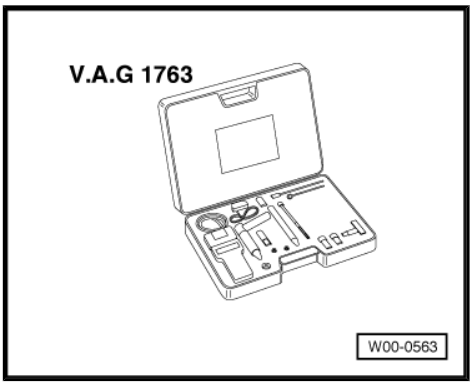

- Torque wrench -V.A.G 1331-

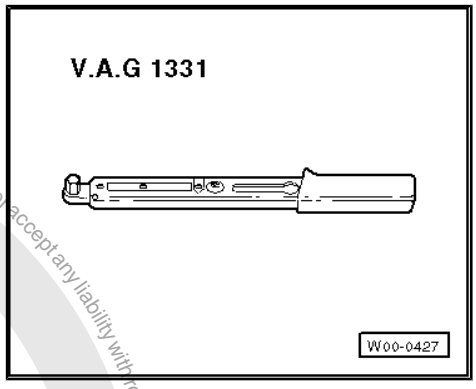

1.3.1 Test prerequisite

- Engine oil temperature must be at least 30 °C.
- – Remove air filter. Remove bolts -arrows- as marked for this.
- – Remove spark plugs using spark plug spanner.
- – Disconnect connector from Hall sender (ignition distributor).
- – Have a second mechanic fully depress the accelerator pedal.
- – Check compression using compression tester -V.A.G 1763- .

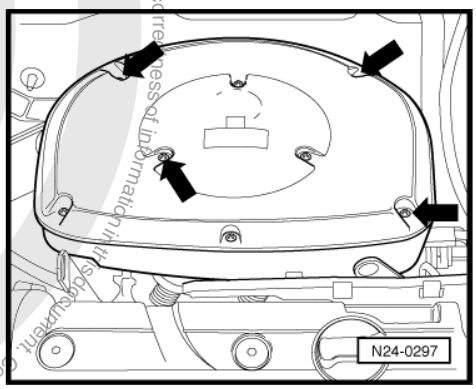

Note

How to use the test unit is described in the respective operating instructions.

- – Operate starter until tester shows no further pressure increase.

Compression pressures:

New: 10 ... 15 bar.

Wear limit: 7 bar

Maximum permissible difference between all cylinders: 3 bar

Protected by copyright. Copying for private or commercial purposes, partly or in whole, is not permitted unless authorised by Volkswagen AG. Volkswagen AG does not guarantee or accept any liability with respect to the correctness of information in this document. Copyright by Volkswagen AG.
satelettronica

2 Repairing valve gear

Note

Cylinder heads which have cracks between the valve seats or between a valve seat insert and the spark plug thread can be used further without reducing service life, provided the cracks do not exceed a maximum of 0.5 mm in width, or when no more than the first 4 turns of the spark plug thread are cracked.

2.1 Assembly overview - valve gear

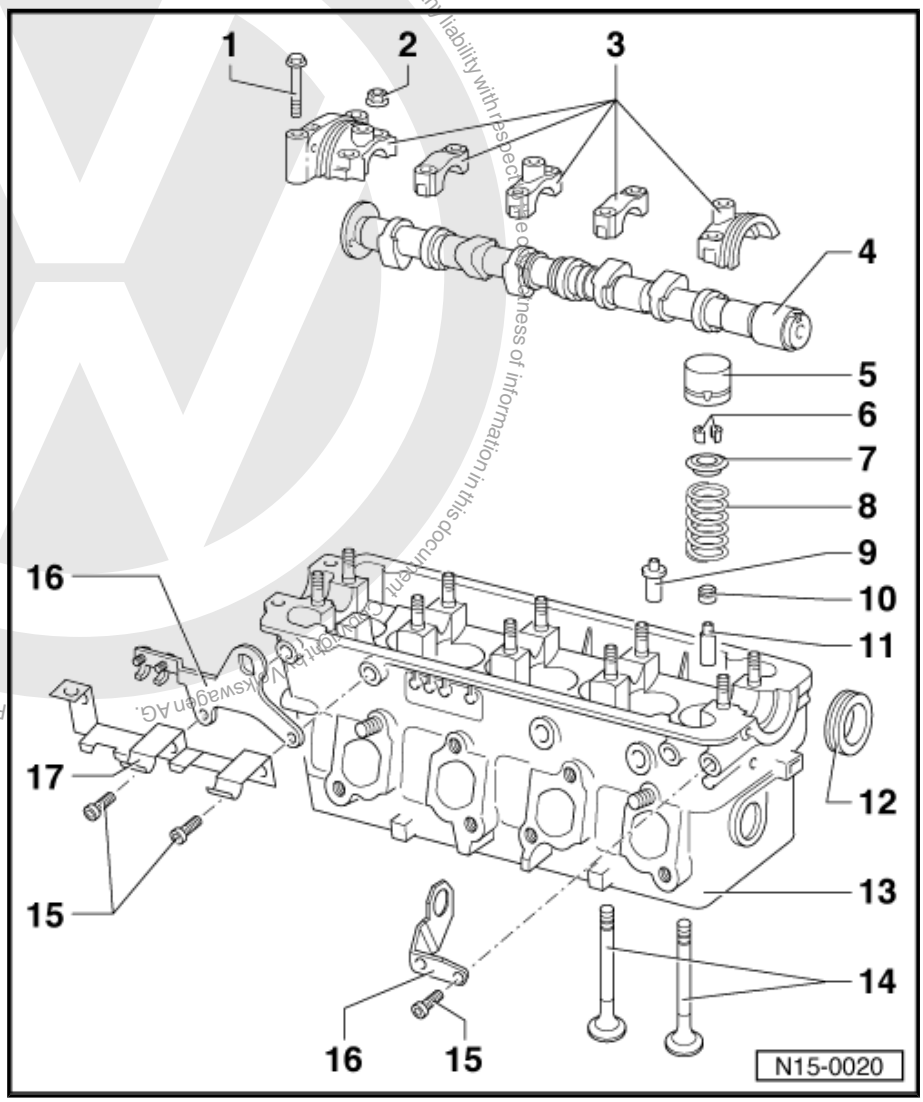

1 - 10 Nm

2 - 6 Nm + 1/4 turn (90 °) further

- ❑ Installation position and installation sequence ⇒ page 49 , removing and installing camshaft.
- ❑ Lightly coat contact surfaces of bearing caps 1 and 5 with sealant -AMV 174 004 01- .

3 - Bearing cap

4 - Camshaft

- ❑ Checking axial clearance ⇒ page 41 .
- ❑ Removing and installing ⇒ page 49
- ❑ Check radial clearance with Plastigage, wear limit: 0.1 mm
- ❑ Runout: max. 0.01 mm
- ❑ Identification and valve timing ⇒ page 42

5 - Bucket tappet

- ❑ Do not interchange
- ❑ With hydraulic valve clearance compensation
- ❑ Checking ⇒ page 48
- ❑ Place down with contact surface facing downwards
- ❑ Before installing, check camshaft axial clearance ⇒ page 41
- ❑ Oil contact surface

6 - Cotters

7 - Valve spring plate

8 - Valve spring

- ❑ Removing and installing: with cylinder head removed, use valve spring compressor -2037- ; with cylinder head installed ⇒ page 52 .

satelettronica

9 - Valve guide (for repair)

- ❑ With collar.

10 - Valve stem seal

- ❑ Renewing ⇒ page 52

11 - Valve guide

- ❑ Checking ⇒ page 50
- ❑ Renewing ⇒ page 51

12 - Seal

- ❑ Lightly oil sealing lip of oil seal
- ❑ Renewing ⇒ page 46

13 - Cylinder head

- ❑ Rework valve seat ⇒ page 43 .
- ❑ Rework sealing surface ⇒ page 41 .

14 - Valves

- ❑ Do not rework, only lapping-in is permitted.
- ❑ Valve dimensions ⇒ page 43 .

15 - 20 Nm

16 - Lifting eye

17 - Bracket

- ❑ For ignition wiring guide

2.1.1 Reworking cylinder head sealing surface

Cylinder head reworking dimension: a = at least 135.6 mm

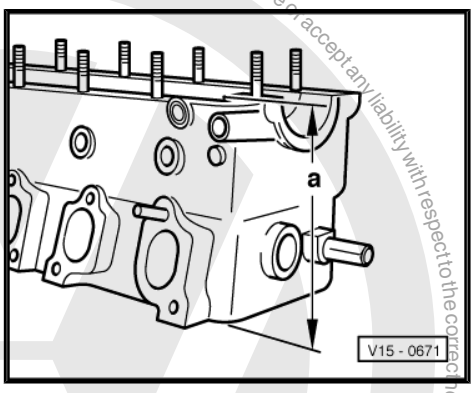

Note

When the sealing surface has been reworked, the valves must be set deeper by the same amount (valve seat inserts reworked) or valves will contact pistons. When doing so, ensure that the minimum permissible dimension is maintained *⇒ page 43* *.*

2.1.2 Checking camshaft axial clearance

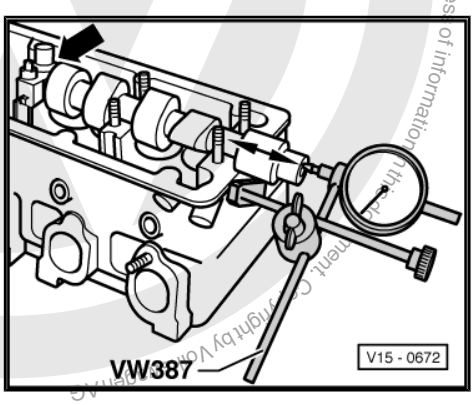

Special tools and workshop equipment required

Protected by copyright. Copying for private or commercial purposes, in whole or in part, is not permitted unless authorised by Volkswagen AG. Volkswagen AG does not guarantee or accept any liability with respect to the correctness of information in this document. Copyright by Volkswagen AG.
satelettronica

- Universal dial gauge bracket -VW 387-

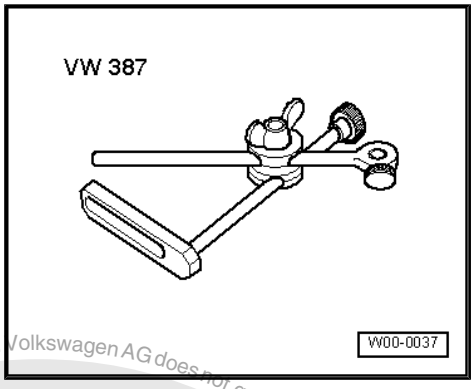

- Dial gauge

Perform measurements with bucket tappets removed and bearing cap 3 fitted.

Wear limit: max. 0.15 mm.

2.1.3 Camshaft identification, valve timing

Identification

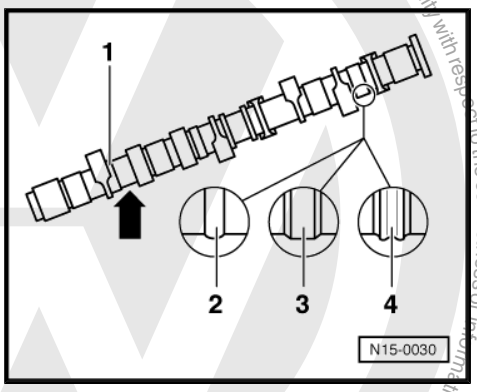

Engine code	ADX	AEA	AEE to 12.95	AEE from 01.96	AER	AEV	AEX ANX APQ	AKV	ALL
Between inlet and exhaust cams of cylinder 1 -arrow-	030 AS or 030 AN	032 N or 032 P	032 P	032 S	030 BG	030 BA or 030 BD	030AM	030 AM	030 BG
Ring identification	1 and 2	1	1	1	without	without or 1 and 4	1 and 2	1 and 2	with-out

2.1.4 Valve timing at 1 mm valve lift

Engine code	ADX	AEA	AEE to 12.95	AEE from 01.96	AER	AEV	AEX ANX APQ	AKV	ALL
Inlet opens ATDC	7 °	8 °	8 °	7 °	10 °	12 °	10 °	10 °	10 °
Inlet closes ABDC	15 °	32 °	32 °	32 °	27 °	20 °	27 °	27 °	27 °
Exhaust opens BBDC	15 °	27 °	27 °	32 °	34 °	10 °	27 °	27 °	34 °
Exhaust closes BTDC	7 °	3 °	3 °	9 °	10 °	2 °	10 °	10 °	10 °

Protected by copyright. Copyright by Volkswagen AG. Volkswagen AG does not guarantee or accept any liability with respect to the correctness of information in this document. Copying for private or commercial purposes, in part or in whole, is not permitted unless authorised by Volkswagen AG.
satelettronica

2.1.5 Valve dimensions

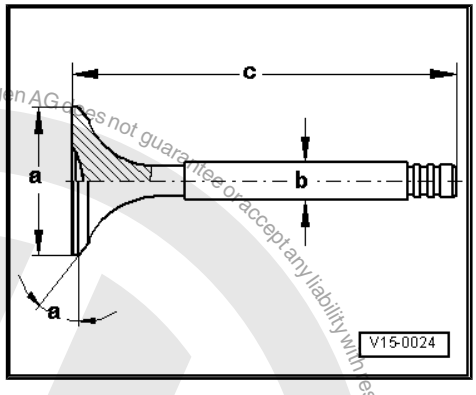

Note

Valves must not be reworked. Only lapping-in is permitted.

Inlet valve

Dimension		Engine code							
		ADX	AEA	AEE	AEX ANX APQ	AER	AEV	AKV	ALL
∅ a	mm	32.1	35.6	35.6	35.6	31.0	32.0	32.0	31.0
∅ b	mm	6.963	6.963	6.963	6.963	6.967	6.963	6.963	6.967
c	mm	94.5	94.8	94.8	94.8	94.8	99.3	99.3	94.8
α	∠°	45	45	45	45	45	45	45	45

Exhaust valve

Dimension		Engine code							
		ADX	AEA	AEE	AEX ANX APQ	AER	AEV	AKV	ALL
∅ a	mm	29.0	29.0	29.0	29.0	26.0	29.0	29.0	26.0
∅ b	mm	6.943	6.943	6.943	6.943	6.950	6.943	6.943	6.950
c	mm	95.0	95.0	95.0	95.0	94.5	99.1	99.1	94.5
α	∠°	45	45	45	45	45	45	45	45

2.2 Reworking valve seats

Special tools and workshop equipment required

- Depth gauge
- Valve seat refacing tool

Note

- *When repairing engines with leaking valves, it is not sufficient to reface or renew valve seats and valves. Particularly on high mileage engines, it is necessary also to check valve guides for wear* *⇒ page 50* *.*
- *Valve seats should be reworked only enough to produce a perfect seating pattern. Before beginning to rework valve seats, calculate the maximum permissible reworking dimensions. If the reworking dimension is exceeded, hydraulic valve compensation can no longer be guaranteed and the cylinder head should be renewed.*

Protected by copyright. Copying for private or commercial purposes, in part or in whole, is not permitted unless authorised by Volkswagen AG. Volkswagen AG does not guarantee or accept any liability with respect to the correctness of information in this document. Copyright by Volkswagen AG.
satelettronica

The max. permissible reworking dimension is calculated as follows:

– Insert valve and press firmly against valve seat.

Note

If the valve is to be renewed as part of a repair, use a new valve for the calculation.

– Measure distance -a- between end of valve stem and upper edge of cylinder head.

– Calculate maximum permissible reworking dimension from measured distance and minimum dimension.

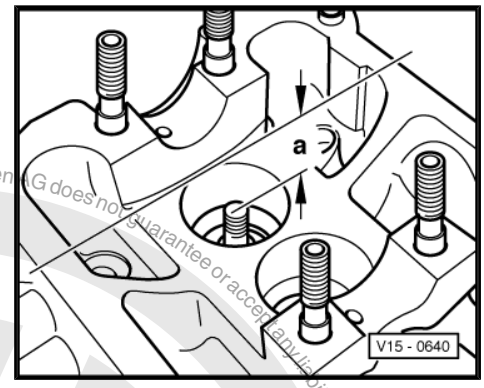

Minimum dimension:

- Inlet valve 35.8 mm
- Exhaust valve 36.1 mm

Measured distance minus minimum dimension = max. permissible reworking dimension.

Example:

-	Measured distance Minimum dimension	36.5 mm 35.8 mm
=	max. perm. rework dimension [6]	0.7 mm

6) The max. permissible reworking dimension is shown on illustrations for reworking valve seats as -dimension b-.

2.2.1 Reworking inlet valves for engine codes ADX, AEA, AEE, AER, AEX, AKV, ALL, ANX, APQ

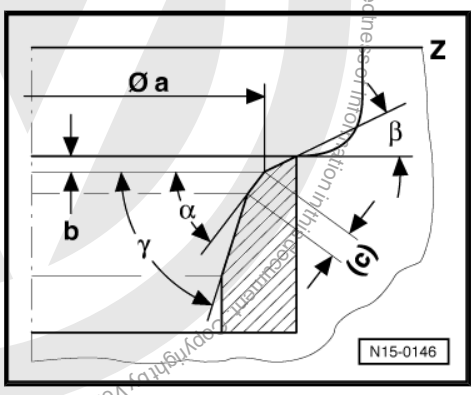

a	ADX = ∅ 30.9 mm
	AER, ALL = ∅ 29.8 mm
	AEA, AEE, AEX, AKV, ANX, APQ = ∅ 34.4 mm
b	= max. permissible reworking dimension [6]
c	= max. 2.0 mm
Z	= bottom surface of cylinder head
α	= 45 ° valve seat angle
β	= 30 ° upper correction angle
g	= 60 ° lower correction angle

Protected by copyright. Copying for private or commercial purposes, in part or in whole, is not permitted unless authorised by Volkswagen AG. Volkswagen AG does not guarantee or accept any liability with respect to the correctness of information in this document. Copyright by Volkswagen AG.
satelettronica

Note

Valve seats with a contraction: may only be reworked so as not to damage the contraction

2.2.2 Reworking inlet valves for engine code AEV

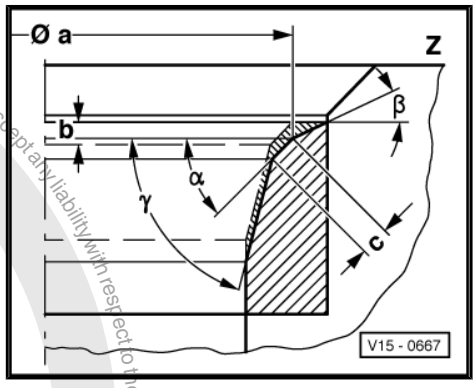

a	= ∅ 30.8 mm
b	= max. permissible reworking dimension [6)]
c	= max. 2.0 mm
Z	= bottom surface of cylinder head
α	= 45 ° valve seat angle
β	= 30 ° upper correction angle
γ	= 60 ° lower correction angle

2.2.3 Reworking exhaust valves for engine codes ADX, AEA, AEE, AER, AEX, AKV, ALL, ANX, APQ

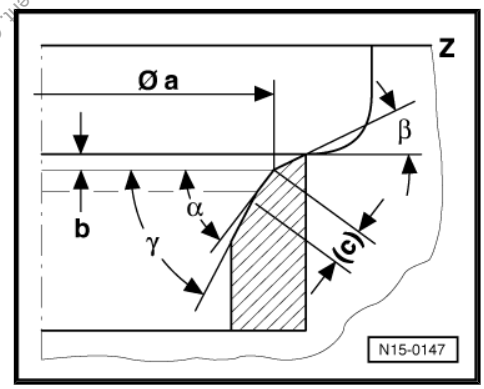

a	AER, ALL = ∅ 24.8 mm
	ADX, AEA, AEE, AEX, AKV, ANX, APQ = ∅ 27.8 mm
b	= max. permissible reworking dimension [6)]
c	= max. 2.0 mm
Z	= bottom surface of cylinder head
α	= 45 ° valve seat angle
β	= 30 ° upper correction angle
γ	= 60 ° lower correction angle

Protected by copyright. Copying for private or commercial purposes, in part or in whole, is not permitted unless authorised by Volkswagen AG. Volkswagen AG does not guarantee or accept any liability with respect to the correctness of information in this document. Copyright by Volkswagen AG.
satelettronica

2.2.4 Reworking exhaust valves for engine code AEV

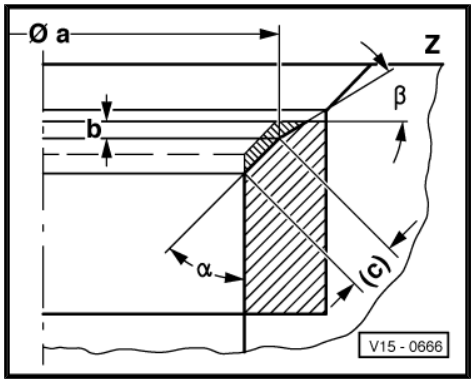

a	= ∅ 27.8 mm
b	= max. permissible reworking dimension [6)]
c	= max. 2.0 mm
Z	= bottom surface of cylinder head
α	= 45 ° valve seat angle
β	= 30 ° upper correction angle

2.3 Renewing camshaft oil seal

Protected by copyright. Copying for private or commercial purposes, in part or in whole, is not permitted unless authorised by Volkswagen AG. Volkswagen AG does not guarantee or accept any liability with respect to the correctness of information in this document. Copyright by Volkswagen AG.

satelettronica

Special tools and workshop equipment required

- Fitting tool -10 - 203-
- Oil seal extractor -2085-
- Counterhold tool -3036-
- Oil seal fitting tool -3083-
- Torque wrench -V.A.G 1332-

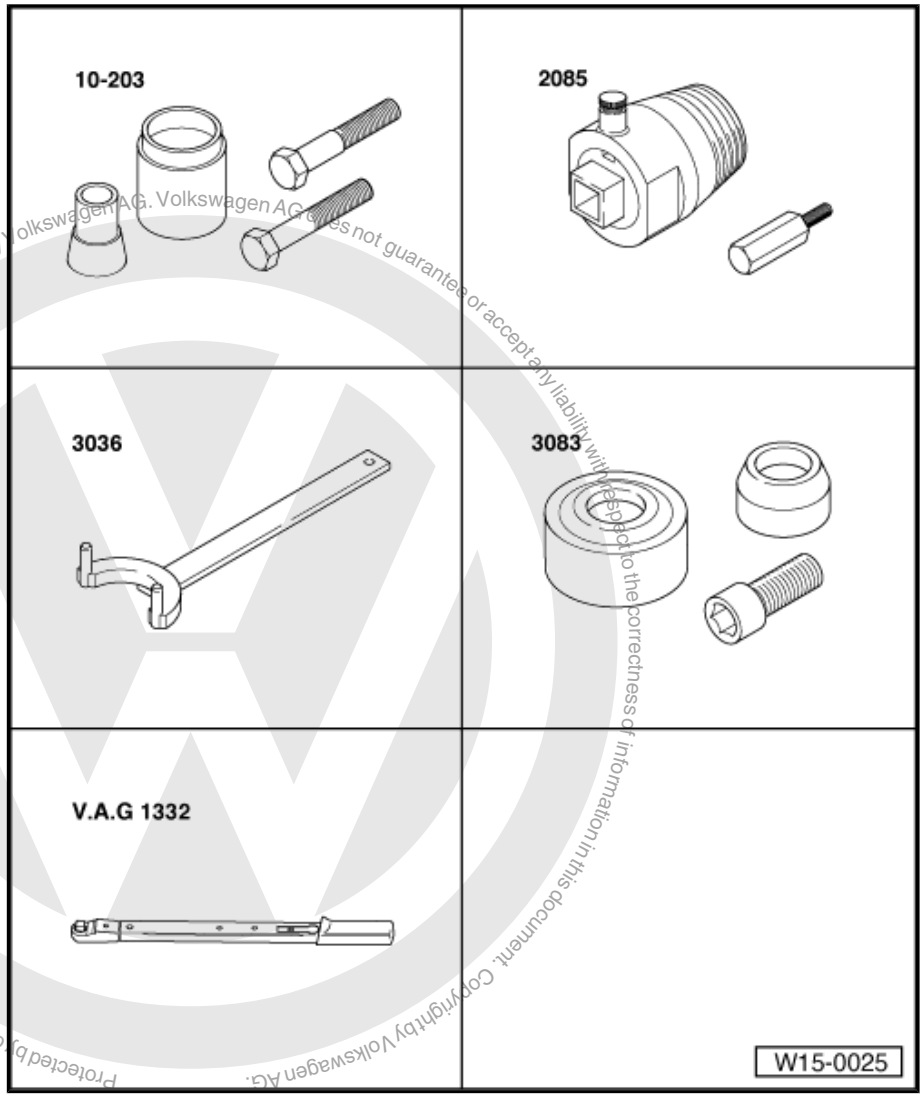

Protected by copyright. Copyright for private or commercial purposes, in part or in whole, is not permitted unless authorised by Volkswagen AG. Volkswagen AG does not guarantee or accept any liability with respect to the correctness of information in this document. Copyright by Volkswagen AG.

2.3.1 Removing

– First remove toothed belt ⇒ page 14 .

– Turn crankshaft back slightly.

– Remove camshaft pulley. When loosening camshaft toothed belt pulley bolt, hold with counterhold tool -3036- .

– Remove rear toothed belt guard.

– Screw inner part of oil seal extractor -2085- two turns (approx. 3 mm) out of outer part and lock with knurled screw.

– Oil threaded head of oil seal extractor and drive extractor into oil seal using light blows of a plastic head hammer. The knurled screw must lie to the left on the console as shown.

– Screw extractor forcibly as far as possible into oil seal.

– Loosen knurled screw and turn inner part against camshaft until the oil seal is pulled out.

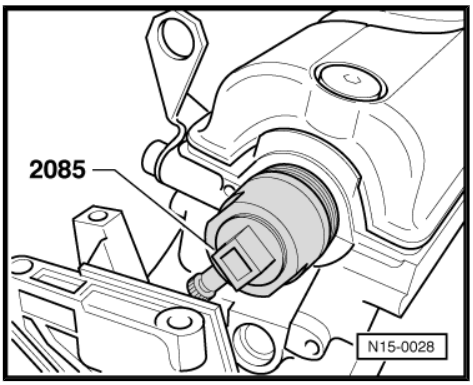

satelettronica

2.3.2 Installing

– Lightly oil sealing lip of oil seal.

– Position oil seal using guide sleeve of oil seal fitting tool -3083- .

– Remove guide sleeve.

– Press oil seal in onto stop using press sleeve of fitting tool -10 - 203- and bolt 10-203/1. Place two washers between press sleeve and hexagon head bolt.

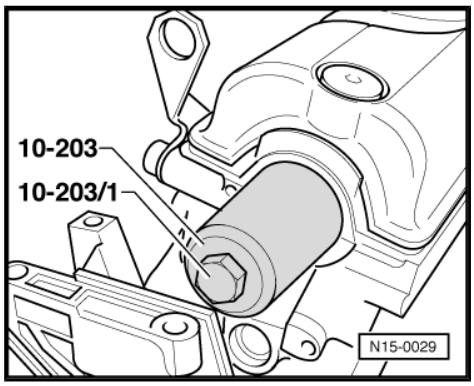

Further assembly is basically a reverse of the dismantling procedure.

How to install toothed belt and adjust valve timing ⇒ page 14 .

2.4 Checking hydraulic bucket tappets

Special tools and workshop equipment required

♦ Feeler gauges

♦ Wood or plastic wedge

Note

♦ *Renew defective bucket tappets complete (cannot be adjusted or repaired).*

♦ *Irregular valve noises on starting engine is normal.*

2.4.1 Test sequence

– Start engine and run until radiator fan has switched on once.

– Increase engine speed to about 2500 rpm for approx. 2 minutes.

If the hydraulic tappets are still noisy, locate defective tappet as follows:

– Remove cylinder head cover.

– Rotate crankshaft clockwise until cam of tappet to be checked is pointing upwards.

– Determine play between cam and bucket tappet.

– Push bucket tappet down lightly with a wooden or plastic wedge. If when bucket tappet is pushed down, a 0.2 mm feeler gauge can be pushed between camshaft and bucket tappet, bucket tappet must be renewed.

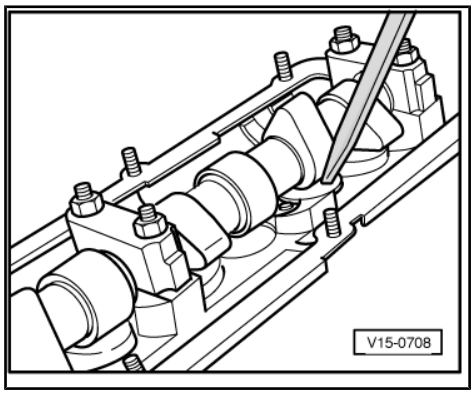

Note

When new bucket tappets have been installed the engine must not be started for about 30 minutes. Hydraulic compensation elements must settle (otherwise valves will strike pistons).

Protected by copyright. Copying for private or commercial purposes, in whole or in part, is not permitted unless authorised by Volkswagen AG. Volkswagen AG does not guarantee or accept any liability with respect to the correctness of information in this document. Copyright by Volkswagen AG.

satelettronica

2.5 Removing and installing camshaft

Special tools and workshop equipment required

- Counterhold tool -3036-
- Torque wrench -V.A.G 1331-
- Torque wrench -V.A.G 1332-
- Sealant -AMV 174 004 01-

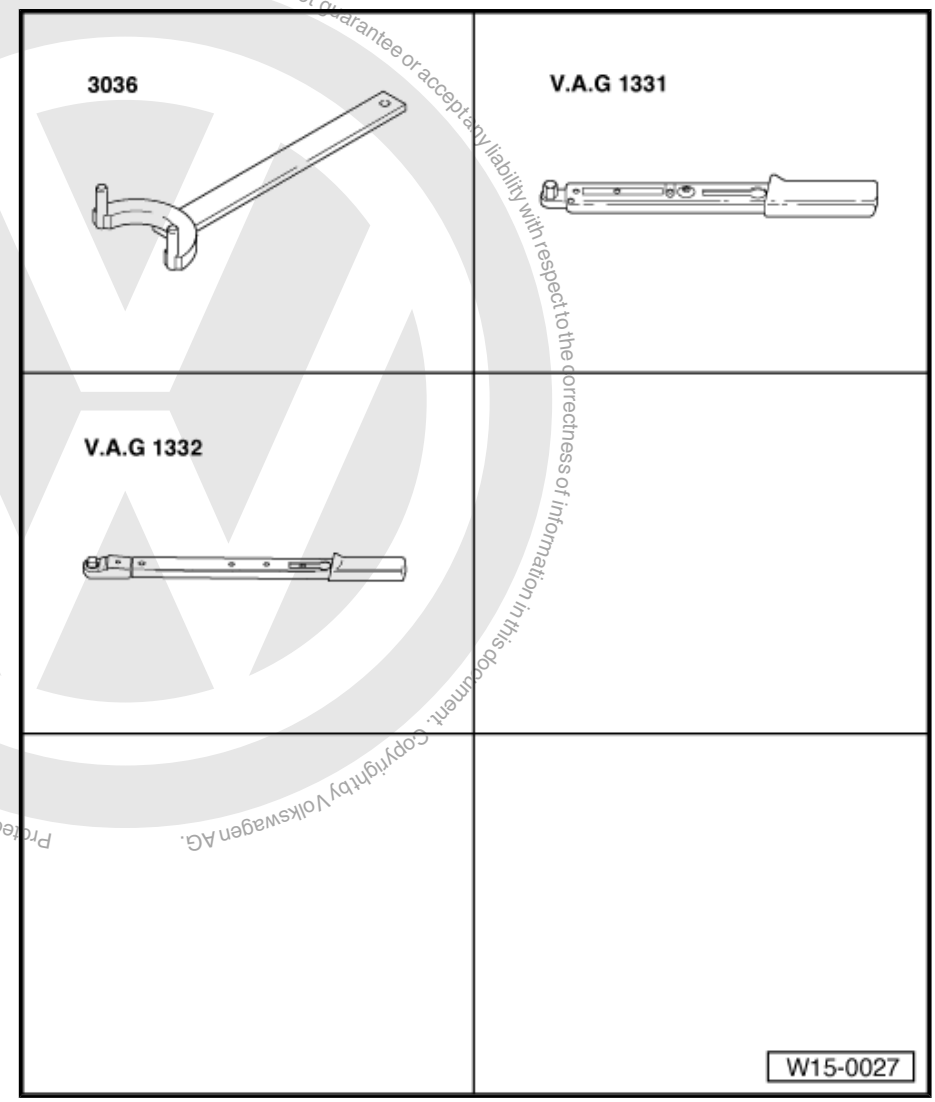

2.5.1 Removing

– First remove toothed belt ⇒ page 14 .

– Turn crankshaft back slightly.

– Remove camshaft pulley. When loosening camshaft toothed belt pulley bolt, hold with counterhold tool -3036- .

– Remove rear toothed belt guard.

– Remove cylinder head cover.

– Remove ignition distributor.

Protected by copyright. Copying for private or commercial purposes, in part or in whole, is not permitted unless authorised by Volkswagen AG. Volkswagen AG does not guarantee or accept any liability with respect to the correctness of information in this document. Copyright by Volkswagen AG.
satelettronica

– First remove bearing caps 5, 1 and 3.

– Loosen bearing caps 2 and 4 alternately and diagonally.

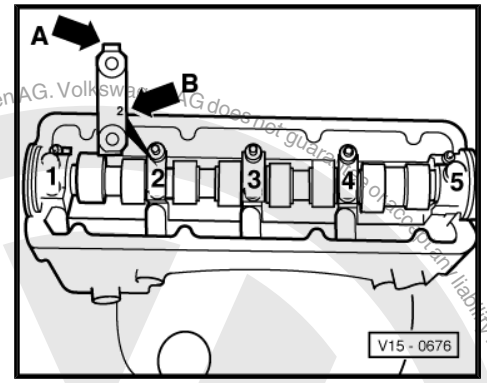

2.5.2 Installing

- The pistons must not be positioned at TDC.

Note

Observe installation position of bearing cap: wider casting -arrow A- towards inlet side and number on bearing cap -arrow B- is legible from exhaust side.

– Oil camshaft contact surfaces.

– Insert camshaft.

– Tighten bearing caps 2 and 4 alternately and diagonally to 6 Nm.

– Lightly coat contact surfaces of bearing caps 1 and 5 with sealant -AMV 174 004 01- .

– Install bearing caps 3, 1, and 5 and tighten to 6 Nm. Insert ignition distributor to centralise bearing cap 5.

– Tighten all nuts $^1/_4$ turn (90°) further.

– Insert bolts for bearing cap 5 and tighten to 10 Nm.

Further assembly is basically a reverse of the dismantling procedure.

How to install toothed belt and adjust valve timing ⇒ page 14 .

Note

When new bucket tappets have been installed the engine must not be started for about 30 minutes. Hydraulic compensation elements must settle (otherwise valves will strike pistons).

2.6 Checking valve guides

Special tools and workshop equipment required

Protected by copyright. Copying for private or commercial purposes, in part or in whole, is not permitted unless authorised by Volkswagen AG. Volkswagen AG does not guarantee or accept any liability with respect to the correctness of information in this document. Copyright by Volkswagen AG.
satelettronica

© Volkswagen AG, Wolfsburg. It does not guarantee or accept any liability with respect to the correctness of information. Copyright by Volkswagen AG. Protected by copyright. Copying for private or commercial purposes, in part or in whole, is not permitted unless authorised by Volkswagen AG.

♦ Universal dial gauge bracket -VW 387-

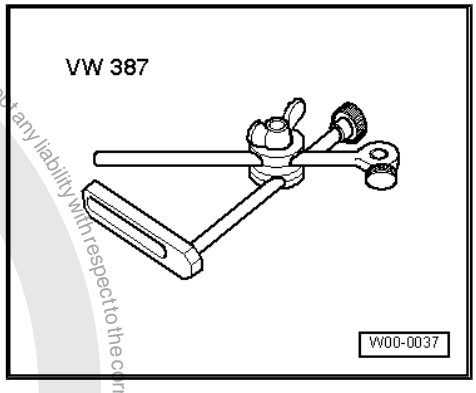

♦ Dial gauge

2.6.1 Test sequence

– Insert new valve into guide. The end of the valve stem must be flush with the guide. Due to differences in stem diameters, use only an inlet valve in inlet guide and an exhaust valve in exhaust guide.

– Determine rock.

Wear limit:

Inlet valve guide = 1.0 mm

Exhaust valve guide = 1.3 mm

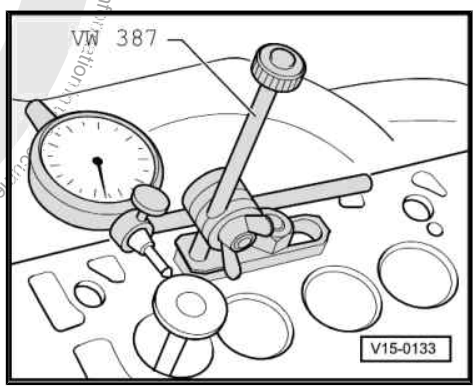

2.7 Renewing valve guides

Special tools and workshop equipment required

♦ Drift -3121-

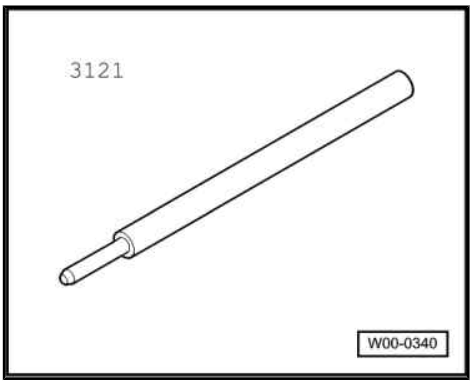

♦ 7 mm reamer -3120-

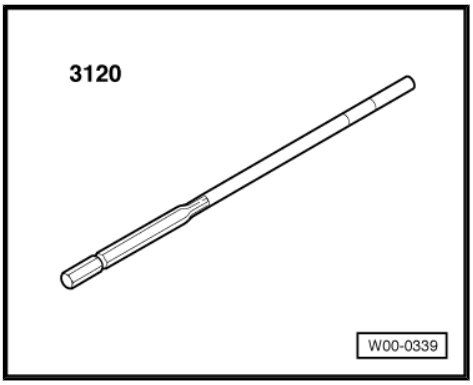

satelettronica

2.7.1 Removing

– First check whether valve seat insert rings and, if necessary, cylinder head sealing surface can be reworked. If this is not the case, the valve guides can also no longer be replaced.

– Press out worn valve guides with drift -3121- , from camshaft side (repair version valve guides with shoulder from combustion chamber side).

2.7.2 Installing

– Press in new guides, moistened with oil, from camshaft side up to shoulder into a cold cylinder head using drift -3121- .

Note

When the shoulder on guide makes contact, the insertion pressure must not exceed 10 kN (approx. 1.0 t) otherwise shoulder may break off.

– Ream valve guide with 7 mm reamer -3120- . Use plenty of cutting fluid.

– Rework valve seats ⇒ page 43 .

2.8 Renewing valve stem seals

Protected by copyright. Copying for private or commercial purposes, in part or in whole, is not permitted unless authorised by Volkswagen AG. Volkswagen AG does not guarantee or accept any liability with respect to the correctness of information in this document. Copyright by Volkswagen AG.
satelettronica

Special tools and workshop equipment required

- Torque wrench -V.A.G 1331-
- Valve lever -VW 541/1 A-
- Thrust piece for VW 541 / 1 A and 2037 -VW 541/5-
- Pressure hose -VW 653/3-
- Valve assembly device -2036-
- Puller -3047 A-
- Fitting tool -3129-

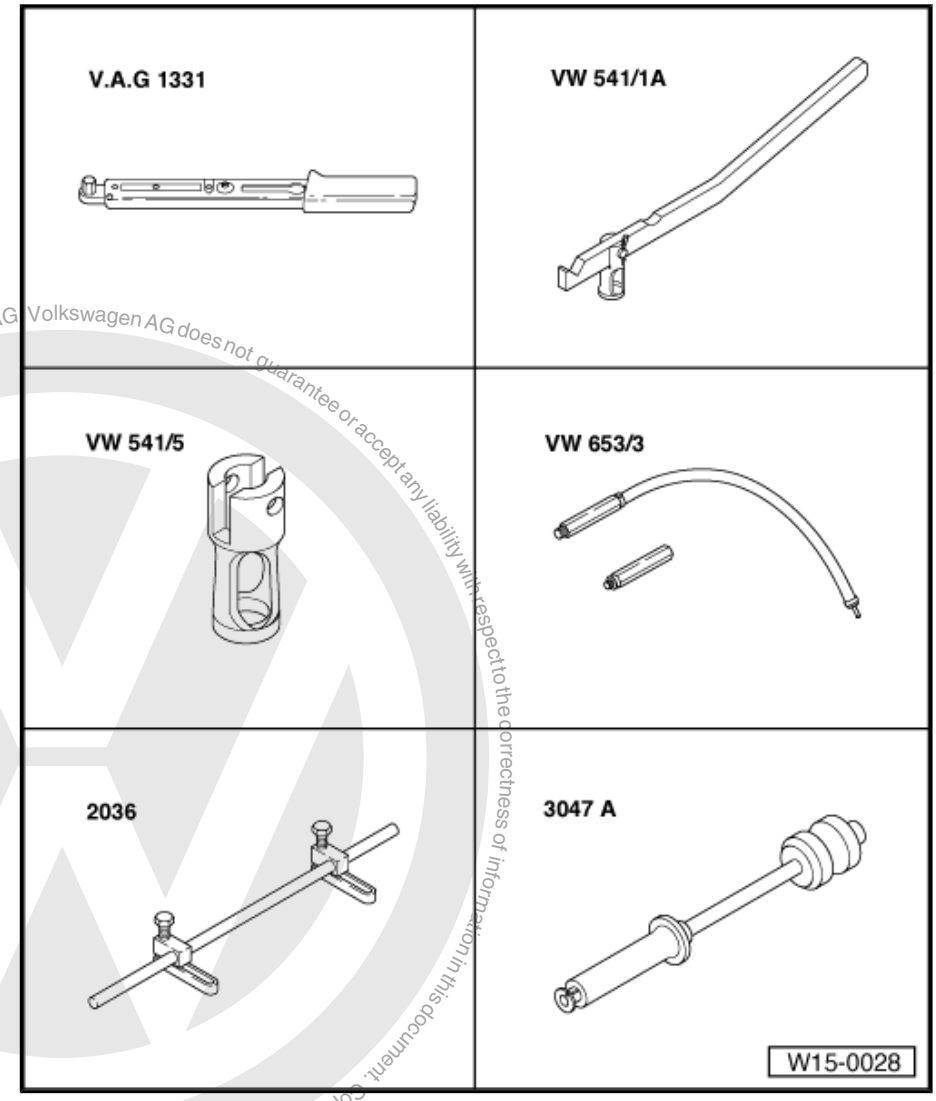

Fitting tool -3129-

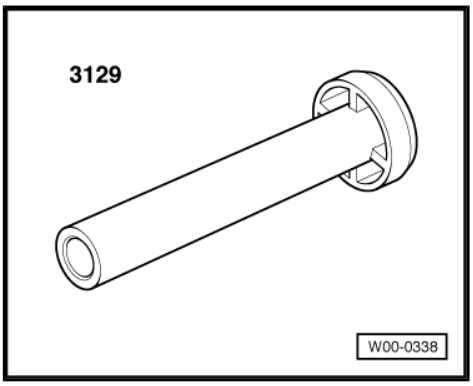

2.8.1 Removing

– First remove toothed belt ⇒ page 14 .

– Then remove camshaft ⇒ page 49 .

– Remove bucket tappets and place them with the contact surface downwards. When doing this, ensure that tappets are not interchanged.

– Remove spark plugs.

– Set piston of respective cylinder to “bottom dead centre”.

Protected by copyright. Copyright for private or commercial purposes, in part or in whole, is not permitted unless authorised by Volkswagen AG. Volkswagen AG does not guarantee or accept any liability with respect to the correctness of information in this document. Copyright by Volkswagen AG.
satelettronica

– Fit valve assembly tool -2036- and adjust mountings to height of studs.
– Screw pressure hose -VW 653/3- into spark plug thread.
– Connect pressure hose to air pressure source of at least 6 bar.
– Remove valve springs using valve lever -VW 541/1 A- and thrust piece for VW 541 / 1 A and 2037 -VW 541/5- .

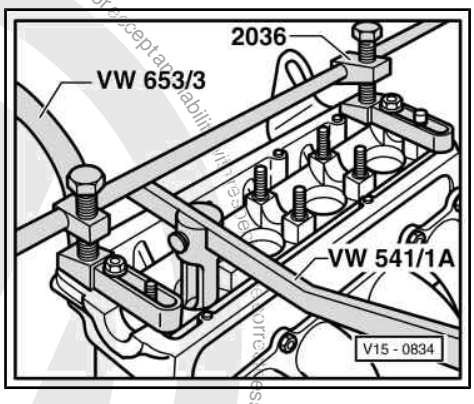

Note

Tight cotters can be loosened by tapping lightly on lever.

– Pull off valve stem seals using puller -3047 A- .

2.8.2 Installing

– Place plastic sleeve supplied on respective valve stem. This will prevent damage to new valve stem seal.
– Place new valve stem seal in fitting tool -3129- .
– Oil valve stem seal sealing lip and press carefully onto the valve guide.

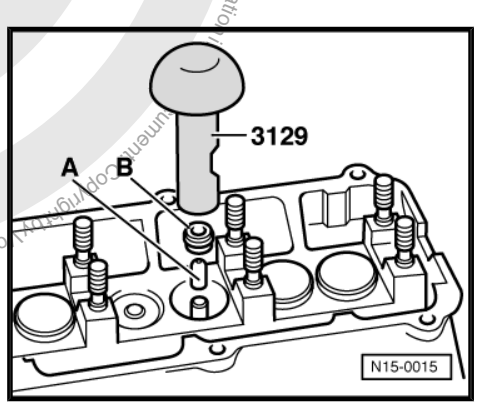

Protected by copyright. Copyright by Volkswagen AG. Volkswagen AG does not guarantee or accept any liability with respect to the correctness of information in this document. Copyright by Volkswagen AG.
satelettronica

17 – Lubrication

1 Lubrication

1.1 Removing and installing parts of lubrication system

Note

The oil level must not be above the max. mark - danger of damage to catalytic converter! Markings ⇒ page 55 .

Checking oil pressure ⇒ page 64

1.1.1 Oil capacities:

- Without oil filter 3.0 l
- With oil filter 3.4 l

7) Up-to-date figures ⇒ Exhaust emissions test binder

1.1.2 Markings on oil dipstick

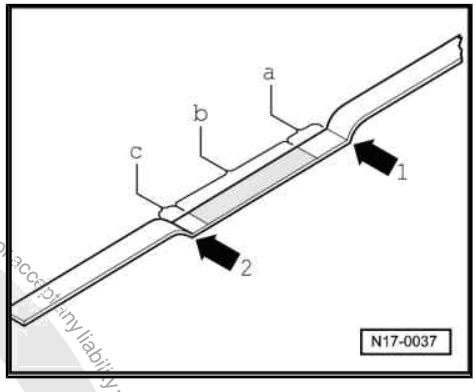

1 - Max. mark

2 - Min. mark

a - Area above hatched field up to max. mark: do not top-up with engine oil!

b - Oil level within hatched field: Can be topped up with engine oil.

c - Area from min. mark up to hatched zone: must be topped up, max. 0.5 l of engine oil!

1.1.3 Engine oil specifications:

Engine oil conforming to VW standard 500 00, 501 01 or 502 00 can be used. Only in exceptional cases: multigrade oils or single-grade oils conforming to API-SF or SG.

1.1.4 Vehicles with chain driven oil pump

Vehicles with Duocentric oil pump ⇒ page 58

Protected by copyright. Copying for private or commercial purposes, in part or in whole, is not permitted unless authorised by Volkswagen AG. Volkswagen AG does not guarantee or accept any liability with respect to the correctness of information in this document. Copyright by Volkswagen AG.
satelettronica

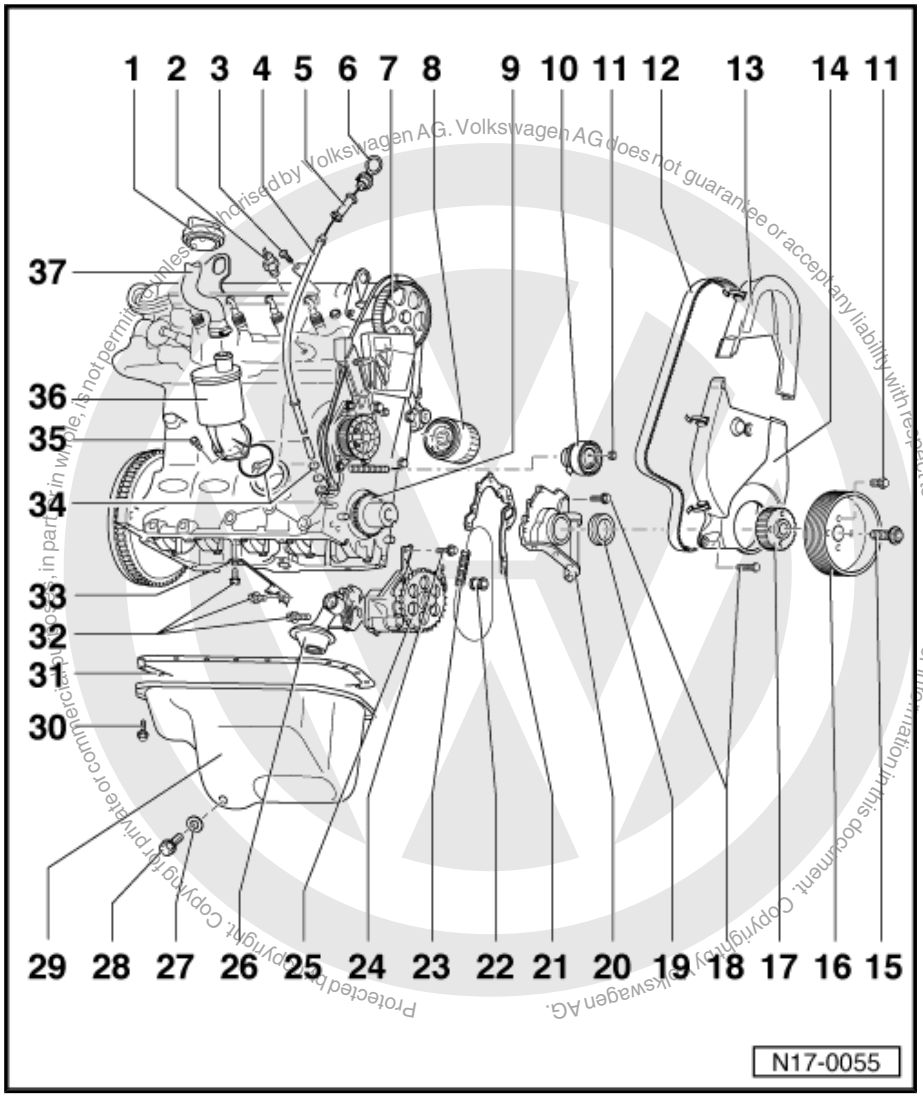

1 - Sealing cap
- ❑ Renew seal if damaged

2 - Oil pressure switch -F22- 0.25 bar, 25 Nm
- ❑ Identification: blue
- ❑ Wire: blue/black
- ❑ Checking ⇒ page 64
- ❑ If sealing ring is leaking, nip open and renew

3 - 10 Nm

4 - Guide tube

5 - Dipstick guide
- ❑ Pull out to extract oil.

6 - Oil dipstick
- ❑ The oil level must not be above the max. mark!
- ❑ Markings ⇒ page 55

7 - Camshaft pulley
- ❑ Note position when installing toothed belt ⇒ page 14 .

8 - Oil filters
- ❑ Loosen with strap wrench
- ❑ Tighten by hand.
- ❑ Observe installation instructions on oil filter.

9 - Sprocket

10 - Tensioning roller
- ❑ Removing, installing and tensioning ⇒ page 14

11 - 20 Nm

12 - Toothed belt
- ❑ Mark direction of rotation before removing.
- ❑ Check for wear
- ❑ Do not kink
- ❑ Removing, installing and tensioning ⇒ page 14

13 - Toothed belt guard upper part

14 - Toothed belt guard lower part

15 - Hexagon bolt: 90 Nm + 120° ($^1/_3$ turn) further; 12 point head bolt = 90 Nm + 90° ($^1/_4$ turn) further
- ❑ Renew
- ❑ Oil before installing.
- ❑ Turning further can be done in several stages.
- ❑ The extra turn angle can be checked using a commercial protractor e.g. Hazet 6690.

16 - Belt pulley
- ❑ When installing note fixing arrangement

17 - Crankshaft toothed belt pulley
- ❑ Note position when installing toothed belt ⇒ page 14 .

satelettronica

18 - 10 Nm
- ❑ For aluminium block: Renew bolts (coated with a sealant)

19 - Seal
- ❑ Renewing ⇒ page 22

20 - Sealing flange

21 - Seal
- ❑ Renew

22 - Sealing bush
- ❑ Renew if damaged
- ❑ First insert in sealing flange
- ❑ Oil when installing

23 - Chain
- ❑ Tensioning ⇒ page 58

24 - 20 Nm

25 - Oil pump
- ❑ Checking backlash ⇒ page 58 .
- ❑ Checking axial clearance ⇒ page 58 .

26 - Oil pump cover with pressure relief valve
- ❑ Opening pressure: 4.0…5.0 bar
- ❑ Clean strainer if soiled.

27 - Seal
- ❑ Renew

28 - Oil drain plug, 30 Nm

29 - Sump
- ❑ Clean sealing surface before fitting.
- ❑ Remove and install on engines with liquid gasket ⇒ page 60 .

30 - 15 Nm
- ❑ Loosen and tighten flywheel end bolts only with long-reach Allen key -T10058- .

31 - Seal
- ❑ Not on engines with liquid gasket
- ❑ Renew
- ❑ Before fitting coat transition points sealing flange/cylinder block with sealant -D 002 989 A2- .

32 - 10 Nm

33 - Bracket

34 - O-ring
- ❑ Renew

35 - 10 Nm

36 - Oil separator

37 - To air filter.

Protected by copyright. Copying for private or commercial purposes, in part or in whole, is not permitted unless authorised by Volkswagen AG. Volkswagen AG does not guarantee or accept any liability with respect to the correctness of information in this document. Copyright by Volkswagen AG.
satelettronica

1.1.5 Checking oil pump backlash

New: 0.05 mm

Wear limit: 0.20 mm

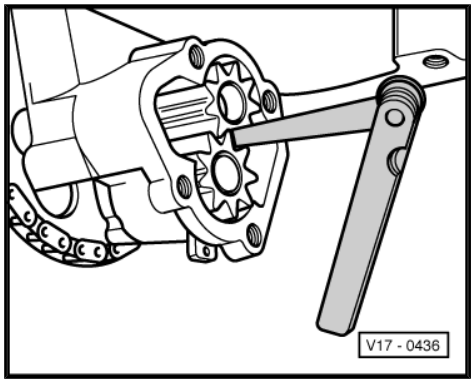

1.1.6 Checking oil pump axial clearance

Wear limit: 0.15 mm

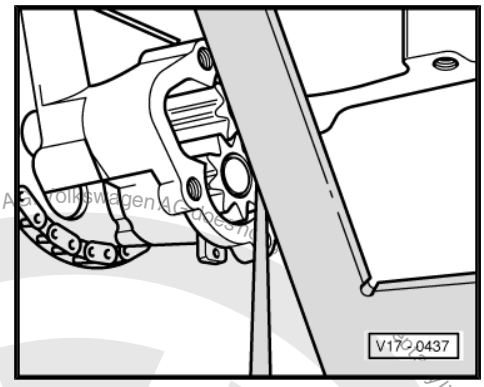

1.1.7 Tensioning drive chain

Tension chain by moving oil pump. Check tension with light thumb pressure.

- Deflection value: a = 4.0 5.0 mm
- Adjustment value: a = 3.5…4.5 mm

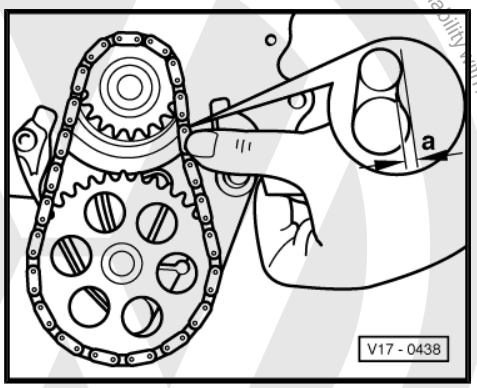

1.1.8 Vehicles with Duocentric oil pump

Protected by copyright. Copying for private or commercial purposes, in part or in whole, is not permitted unless authorised by Volkswagen AG. Volkswagen AG does not guarantee or accept any liability with respect to the correctness of information in this document. Copyright by Volkswagen AG.
satelettronica

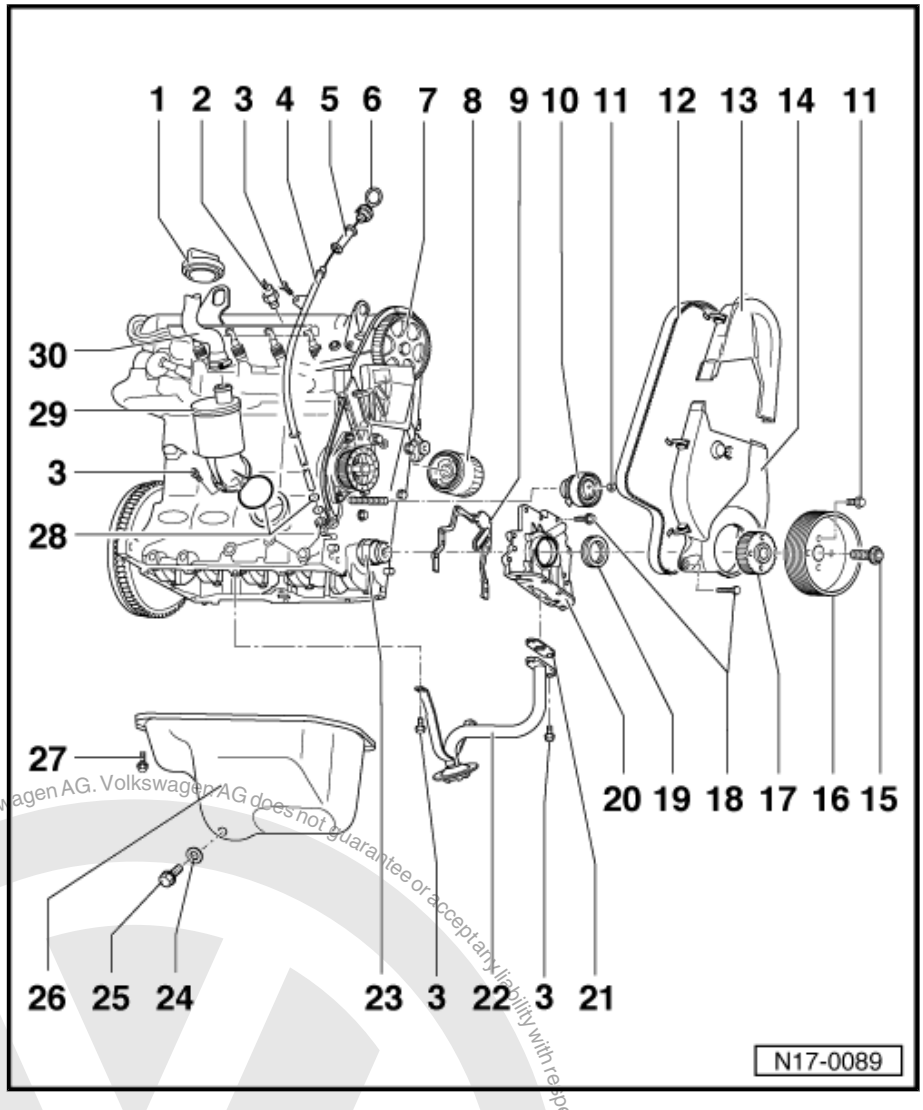

1 - Sealing cap
- ❑ Renew seal if damaged

2 - Oil pressure switch -F1- , 25 Nm
- ❑ Checking ⇒ page 64

3 - 10 Nm

4 - Guide tube

5 - Dipstick guide
- ❑ Pull out to extract oil.

6 - Dipstick
- ❑ The oil level must not be above the max. mark!
- ❑ Markings ⇒ page 55

7 - Camshaft pulley
- ❑ Note position when installing toothed belt ⇒ page 14 .

8 - Oil filters
- ❑ Loosen with strap wrench
- ❑ Tighten by hand.
- ❑ Observe installation instructions on oil filter.

9 - Seal
- ❑ Renew
- ❑ Must seat on dowel sleeves

10 - Tensioning roller
- ❑ Removing, installing and tensioning ⇒ page 14

11 - 20 Nm

12 - Toothed belt
- ❑ Mark direction of rotation before removing.
- ❑ Check for wear
- ❑ Do not kink
- ❑ Removing, installing and tensioning ⇒ page 14

13 - Toothed belt guard upper part

14 - Toothed belt guard lower part

15 - 90 Nm + 1/4 turn (90 °) further
- ❑ Renew
- ❑ Oil before installing.
- ❑ Turning further can be done in several stages.
- ❑ The extra turn angle can be checked using a commercial protractor e.g. Hazet 6690.

16 - Belt pulley
- ❑ When installing note fixing arrangement

17 - Crankshaft toothed belt pulley
- ❑ Note position when installing toothed belt ⇒ page 14 .

Protected by copyright. Copying for private or commercial purposes, in part or in whole, is not permitted unless authorised by Volkswagen AG. Volkswagen AG does not guarantee or accept any liability with respect to the correctness of information in this document. Copyright by Volkswagen AG.
satelettronica

18 - Bolts

- ❑ Cast iron block: Hexagon bolt 8 Nm
- ❑ Aluminium block: Combi-bolt 12 Nm
- ❑ For aluminium block: Renew bolts (coated with a sealant)

19 - Seal

- ❑ Renewing ⇒ page 22

20 - Oil pump

- ❑ Only renew complete
- ❑ When installing, note drive on crankshaft ⇒ Item 23 (page 60)
- ❑ Must seat on dowel sleeves
- ❑ Removing and installing ⇒ page 62

21 - Seal

22 - Suction line

- ❑ Clean strainer if soiled.

23 - Carrier

- ❑ Coat with oil before installing oil pump.

24 - Seal

- ❑ Renew

25 - Oil drain plug, 30 Nm

26 - Sump

- ❑ Remove and install on engines with liquid gasket ⇒ page 60 .
- ❑ Clean sealing surface before fitting.
- ❑ Install with silicone sealant -D 176 404 A2- ⇒ page 60 .

27 - 15 Nm

- ❑ For aluminium block: Renew bolts (coated with a sealant)

28 - O-ring

- ❑ Renew

29 - Oil separator

30 - To air filter.

Protected by copyright. Copying for private or commercial purposes, in part or in whole, is not permitted unless authorised by Volkswagen AG. Volkswagen AG does not guarantee or accept any liability with respect to the correctness of information in this document. Copyright by Volkswagen AG.

satelettronica

1.2 Removing and installing sump

Sequence for engines where the oil sump is sealed with a liquid gasket.

Special tools and workshop equipment required

- ♦ Socket -3249-

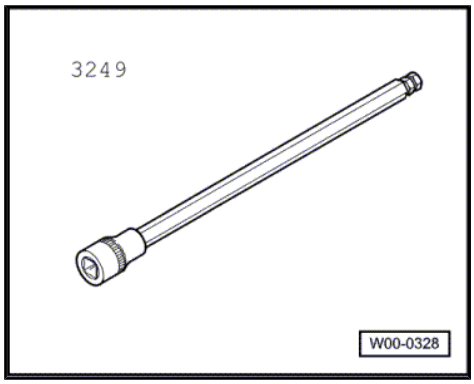

- Torque wrench -V.A.G 1331-

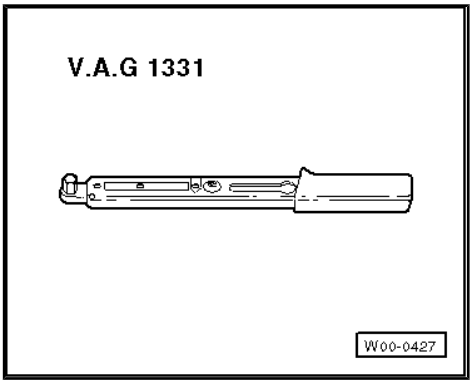

- Hand drill with plastic brush attachment
- Flat scraper

Engine codes AEE, AER, AEX, AKV, ALL, ANX, APQ:

- Silicone sealant -D 176 404 A2-

1.2.1 Procedure

– Drain engine oil.

– Remove toothed belt guard and cable guide on oil sump.

– Remove front exhaust pipe from exhaust manifold.

– Unbolt right drive shaft at gearbox. ⇒ Running gear; Repair group 40; Repairing front suspension (base running gear); Removing and installing wheel bearing, suspension strut, drive shaft (base running gear)

– Remove flywheel splash plate.

– Unbolt sump sealed with liquid gasket.

– Remove sump. Loosen sump with light blows of a rubber-headed hammer if necessary.

– Remove sealant residue from cylinder block with a flat scraper.

– Remove sealant residue on sump using a rotating brush, e.g. a hand drill with a plastic brush attachment (wear eye protection).

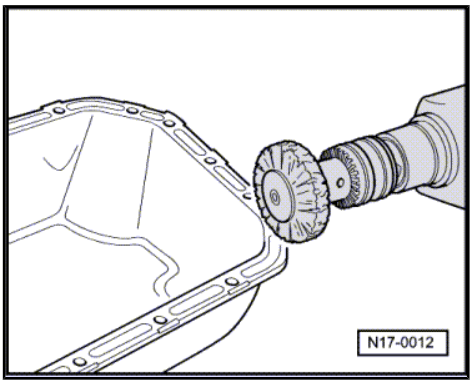

Engine codes ADX, AEA, AEV:

– Install sump with previous hard gasket.

– Tighten oil sump bolts to 15 Nm.

Engine codes AEE, AER, AEX, AKV, ALL, ANX, APQ:

– Clean sealing surfaces. They must be free of oil and grease.

Note

- *Observe expiry date of sealing compound.*
- *The sump must be installed within 5 minutes of applying silicone sealing compound.*
- *Sump can be positioned more easily and with greater security if M6 studs are inserted as guides into the cylinder block flange at two positions.*

Protected by copyright. Copyright by Volkswagen AG. Copying for private or commercial purposes, in part or in whole, is not permitted unless authorised by Volkswagen AG. Volkswagen AG does not guarantee or accept any liability with respect to the correctness of information in this document.
satelettronica

– Cut off tube nozzle at forward marking (nozzle ∅ approx. 3 mm).

– Apply silicone sealing compound, as shown, to clean sealing surface on sump. Sealant bead must be:

♦ 3...4 mm thick.

♦ Run bead along inner side of bolt holes -arrows-

The sealing compound bead must not be thicker, otherwise excessive sealing compound will enter the sump and may block the oil suction pipe strainer.

– Install sump immediately and tighten all sump bolts lightly.

– Tighten oil sump bolts to 15 Nm.

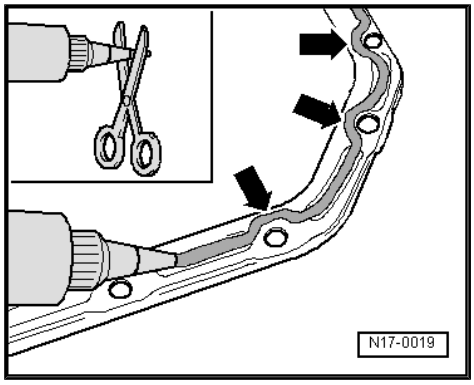

Note

Let sealing compound dry for approx. 30 minutes after installing oil sump. Only then fill engine with oil

1.3 Removing and installing Duocentric oil pump

Special tools and workshop equipment required

♦ Sleeve -T10022 H-

♦ Oil seal fitting tool -3083-

♦ Torque wrench -V.A.G 1331-

♦ Torque wrench -V.A.G 1332-

♦ Counterhold tool for toothed belt sprocket -3099-

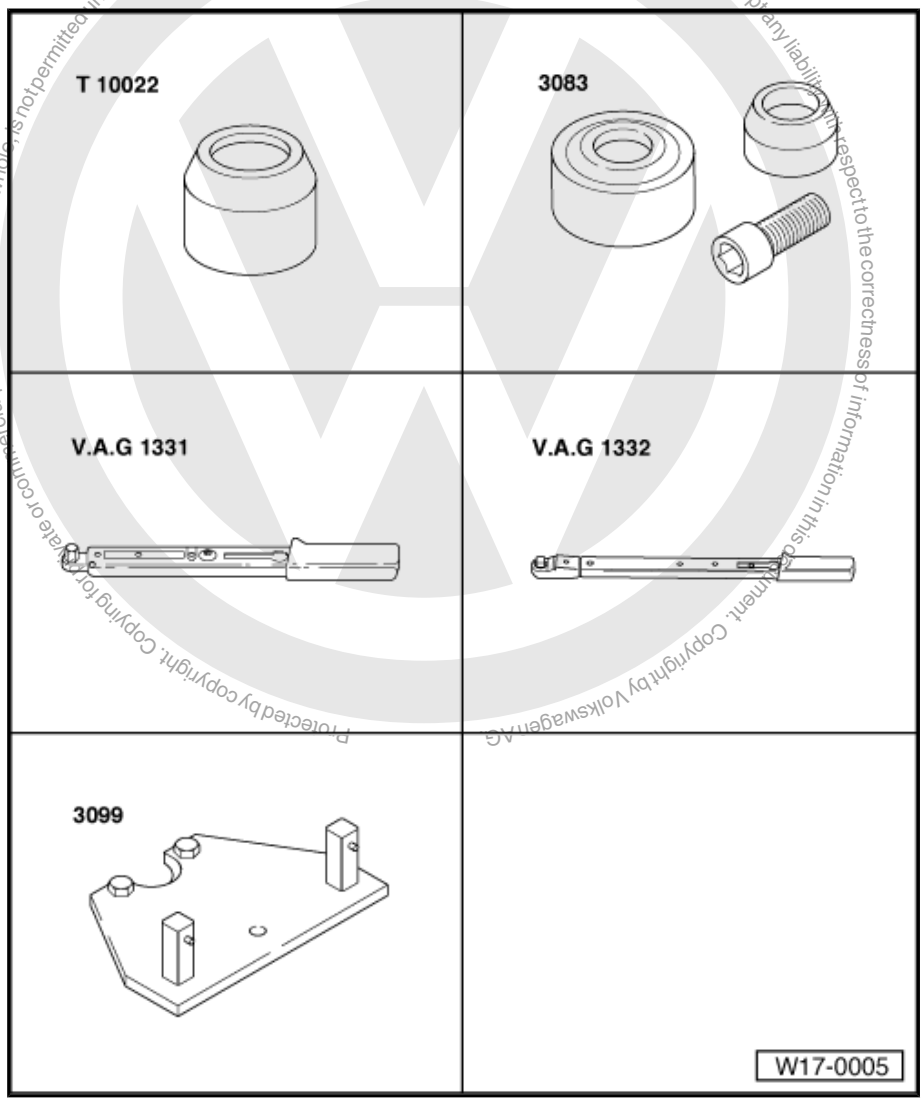

Protected by copyright. Copying for private or commercial purposes, in part or in whole, is not permitted unless authorised by Volkswagen AG. Volkswagen AG does not guarantee or accept any liability with respect to the correctness of information in this document. Copyright by Volkswagen AG

satelettronica

1.3.1 Removing

– Removing toothed belt ⇒ page 14

– Turn crankshaft to TDC No. 1 cylinder.

– The angled tooth of the toothed belt pulley must align with the 2V mark on the oil pump.

– Turn crankshaft and toothed belt pulley three teeth anti-clockwise away from TDC.

– Third tooth -arrow- to right of ground-down tooth -A- on toothed belt pulley must align with TDC mark on oil pump housing.

– Undo securing bolt of crankshaft pulley. To do this, lock toothed belt pulley using counterhold tool -3099- .

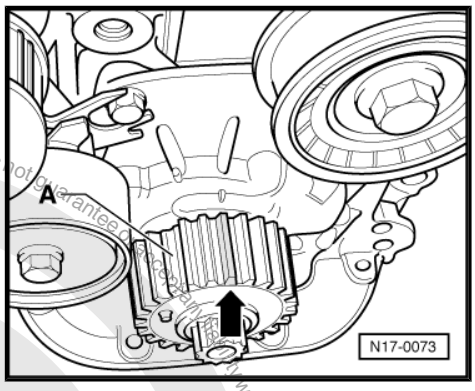

Note

This adjustment moves the crankshaft to the correct installation position for the oil pump. One of the follower polygon cams on the crankshaft is uppermost.

– Remove the crankshaft toothed belt pulley and the belt tensioner. To do this, lock toothed belt pulley using counterhold tool -3099- .

– Remove sump ⇒ page 60 .

– Remove suction pipe ⇒ Item 22 (page 60) .

– Remove oil pump.

– Remove gasket.

– Remove sealant remnants on cylinder block with a flat scraper.

– Clean sealing surfaces. They must be oil and grease free.

1.3.2 Installing

• One of the follower polygon cams -arrow- on the crankshaft is uppermost.

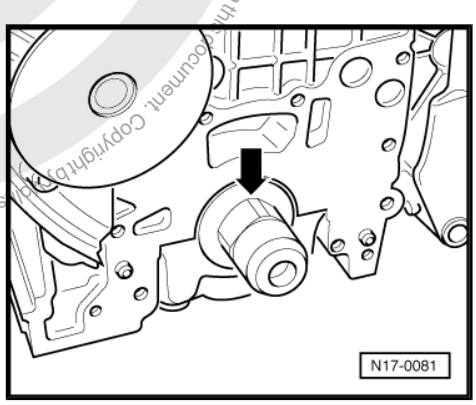

Protected by copyright. Copying for private or commercial purposes, in part or in whole, is not permitted unless authorised by Volkswagen AG. Volkswagen AG does not guarantee or accept any liability with respect to the correctness of information in this document. Copyright by Volkswagen AG.
satelettronica

1.3.3 Procedure

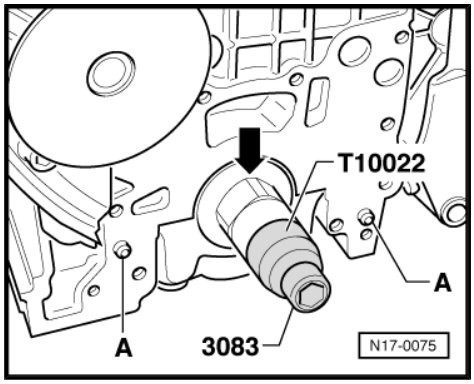

- Fit hexagon socket head bolt from oil seal fitting tool -3083- with assembly tool -T10022- onto crankshaft and tighten by hand.
- Fit new gasket onto guide pins -A-.

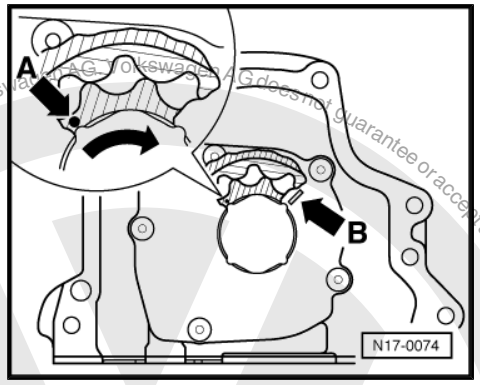

- Position marking -arrow A- of inner rotor of oil pump at installation position marking -arrow B- on oil pump housing cover.
- Coat the four crankshaft follower polygon cams with oil.
- Lightly oil sealing lip of oil pump oil seal.
- Guide oil pump carefully onto crankshaft follower polygon cams.
- Align inner rotor to crankshaft follower polygon cams by turning slightly if necessary.
- Then slide oil pump carefully onto dowel sleeves.
- Secure oil pump ⇒ Item 20 (page 60)
- Remove assembly tool -T10022- .
- Install suction line ⇒ Item 22 (page 60)
- Install oil sump ⇒ page 60 .
- Install toothed belt pulley and belt tensioner, install toothed belt and tension ⇒ page 14 , Removing, installing and tensioning toothed belt.

1.4 Checking oil pressure and oil pressure switch

Protected by copyright. Copying for private or commercial purposes, in part or in whole, is not permitted unless authorised by Volkswagen AG. Volkswagen AG does not guarantee or accept any liability with respect to the correctness of information in this document. Copyright by Volkswagen AG.
satelettronica

Special tools and workshop equipment required

- Oil pressure tester -V.A.G 1342-
- Voltage tester -V.A.G 1527B-
- Auxiliary measuring set -V.A.G 1594A-

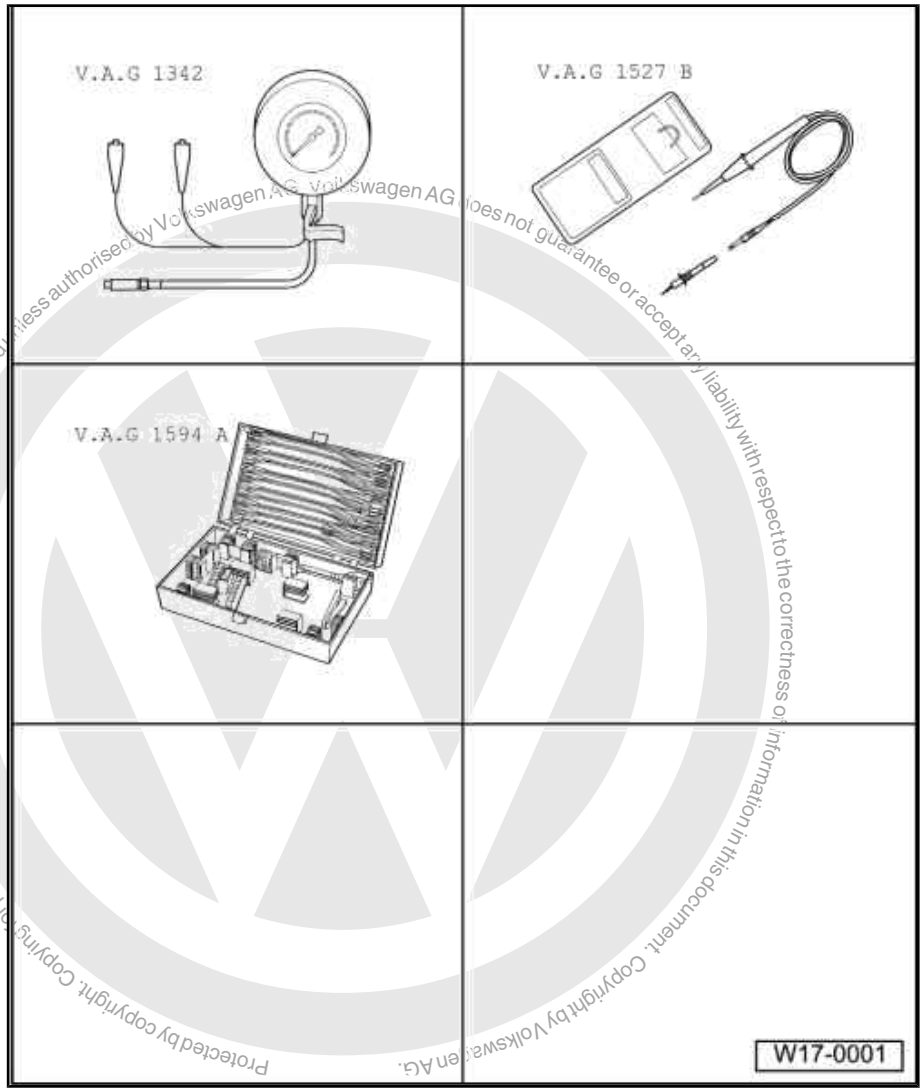

Protected by copyright. Copying for private or commercial purposes, in part or in whole, is not permitted unless authorised by Volkswagen AG. Volkswagen AG does not guarantee or accept any liability with respect to the correctness of information in this document. Copyright by Volkswagen AG.
satelettronica

1.4.1 Test sequence

Vehicles ▸ 08.97

– Remove oil pressure switch -F22- and screw into tester.

– Screw tester into cylinder head in place of oil pressure switch.

– Connect brown wire of tester to earth (-).

– Connect voltage tester -V.A.G 1527B- to battery positive (+) and oil pressure switch using cables from auxiliary measuring set -V.A.G 1594A- . The LED must light up.

– Start engine and increase speed slowly. At 0.15...0.35 bar, the LED must go out; otherwise renew oil pressure switch.

– Increase engine speed further. At 2000 rpm and an oil temperature of 80 °C the oil pressure should be at least 2.0 bar.

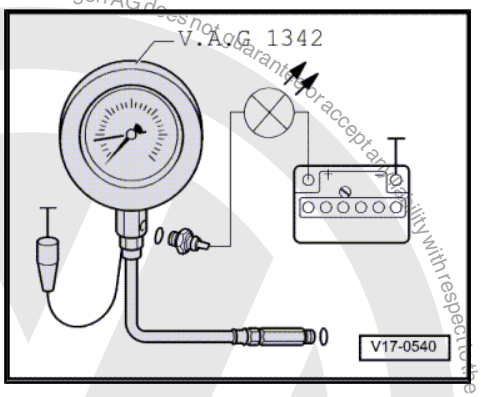

Vehicles 09.97 ▸

Note

Functional check and repair of the visual and acoustic oil pressure warning ⇒ Current flow diagrams, Electrical fault finding and Fitting locations.

– Remove oil pressure switch -F1- and screw into oil pressure tester -V.A.G 1342- .

– Screw oil pressure tester -V.A.G 1342- into cylinder head in place of oil pressure switch.

– Connect brown wire of tester to earth (-).

– Connect voltage tester -V.A.G 1527B- to battery positive (+) and oil pressure switch using cables from auxiliary measuring set -V.A.G 1594A- .

• LED must not light up.

– If LED lights up, renew oil pressure switch -F1- .

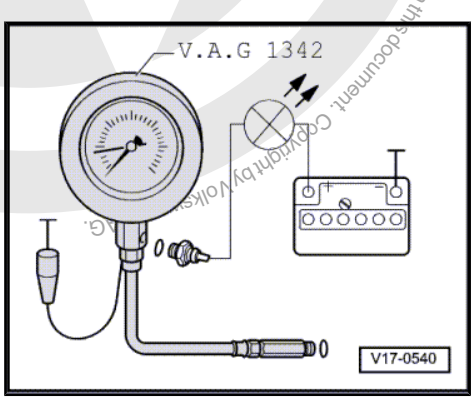

If LED does not light up:

– Start engine and run at idling speed: At 0.3...0.6 bar the LED must light up, otherwise renew oil pressure switch -F1- .

– Increase engine speed further. At 2000 rpm and an oil temperature of 80 °C the oil pressure should be at least 2.0 bar.

Protected by copyright. Copying for private or commercial purposes, in part or in whole, is not permitted unless authorised by Volkswagen AG. Volkswagen AG does not guarantee or accept any liability with respect to the correctness of information in this document. Copyright by Volkswagen AG.
satelettronica

19 – Cooling

1 Cooling

1.1 Removing and installing parts of cooling system

Note

- *When the engine is warm, the cooling system is under pressure. If necessary, release pressure before beginning repair work.*
- *Hoses are secured with spring-type clips. In case of repair, only use spring-type clips.*
- *Hose clip pliers -V.A.G 1921- are recommended for installation of spring-type clips.*

Draining and filling coolant ⇒ page 71

Coolant mixture ratios ⇒ page 71 , draining and filling with coolant

Test for leaks in cooling system using cooling system tester -V.A.G 1274 B- and adapter -V.A.G 1274/3- .

1.2 Parts of cooling system, body side

Protected by copyright. Copying for private or commercial purposes, in part or in whole, is not permitted unless authorised by Volkswagen AG. Volkswagen AG does not guarantee or accept any liability with respect to the correctness of information in this document. Copyright by Volkswagen AG.
satelettronica

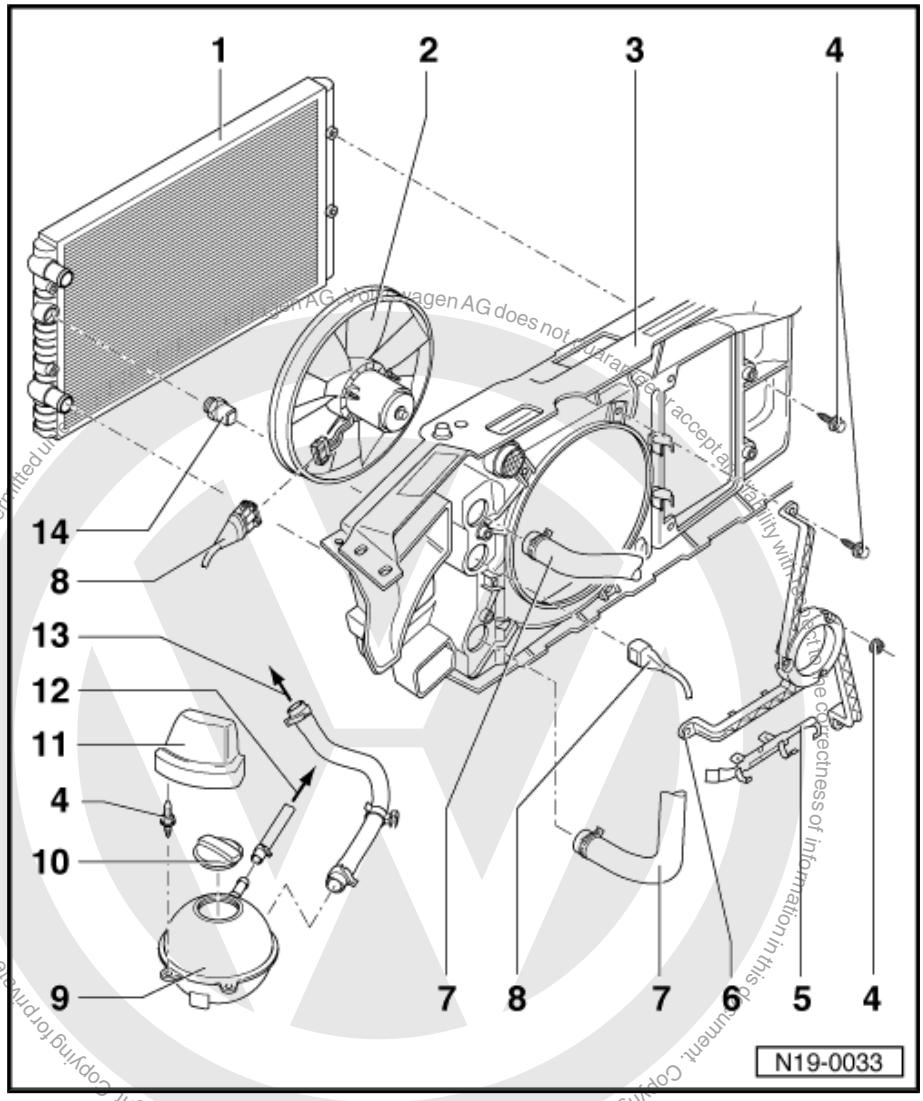

1 - Radiator

- ❑ Removing and installing ⇒ page 74
- ❑ After renewing, renew entire coolant

2 - Radiator fan

3 - Lock carrier

4 - 10 Nm

5 - Cable retainer

6 - Bracket

- ❑ For electric fan

7 - Coolant hose

- ❑ Top: to thermostat housing

◆ ADX, AEA, AEV ⇒ Item 16 (page 69)

◆ AEE, AER, AEX, AKV, ALL, ANX, APQ ⇒ Item 19 (page 70)

- ❑ Bottom: to union

◆ ADX, AEA, AEV, ANX ⇒ Item 17 (page 69)

◆ AEE, AER, AEX, AKV, ALL ANX, APQ ⇒ Item 3 (page 70)

8 - Connector

9 - Expansion tank

10 - Sealing cap

- ❑ Check using cooling system tester -V.A.G 1274 B- and 1274/4
- ❑ Test pressure: 1.4...1.6 bar

11 - Cover

- ❑ Bottom: to union ADX, AEA, AEV, ANX ⇒ Item 17 (page 69)
- ❑ AEE, AER, AEX, AKV, ALL ANX, APQ ⇒ Item 3 (page 70)

12 - To thermostat housing

- ❑ ADX, AEA, AEV ⇒ Item 5 (page 69)
- ❑ AEE, AER, AEX, AKV, ALL, ANX, APQ ⇒ Item 7 (page 70)

13 - To thermostat housing

- ❑ ADX, AEA, AEV ⇒ Item 6 (page 69)
- ❑ AEE, AER, AEX, AKV, ALL, ANX, APQ ⇒ Item 9 (page 70)

14 - Radiator fan thermal switch -F18- , 35 Nm

- ❑ For electric fan

◆ Switching temperatures: Stage 1 on: 92...97 °C: off: 84...91 °C

◆ Switching temperatures: Stage 2 on: 99...105 °C: off: 91...98 °C

Protected by copyright. Copyright by Volkswagen AG.

satelettronica

1.3 Parts of cooling system, engine side

1.3.1 Thermostat side, engine codes ADX, AEA, AEV

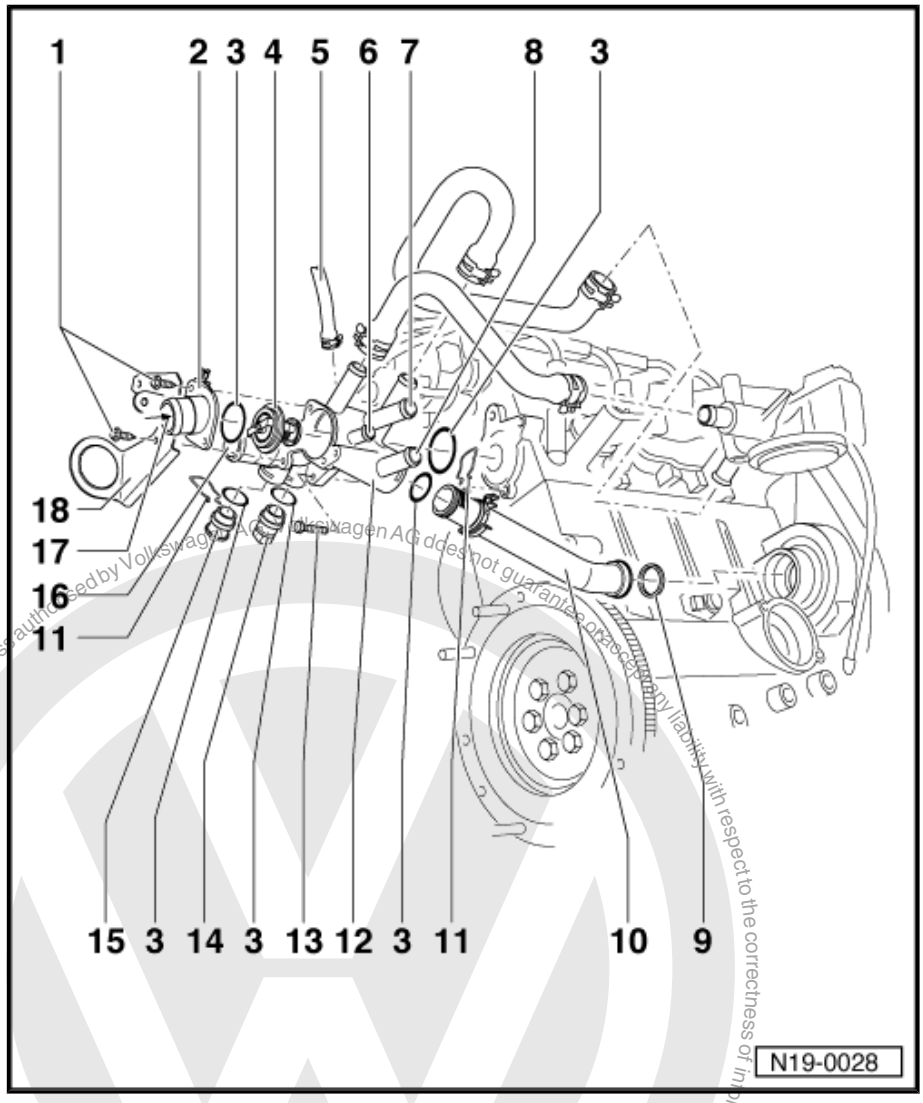

1 - Self-tapping bolt

2 - Connection

3 - O-ring
- ❑ Renew

4 - Thermostat
- ❑ Checking: Heat up thermostat in water
- ❑ Opening begins at approx. 84 °C.
- ❑ Ends at approx. 98 °C
- ❑ Opening lift min. 7 mm
- ❑ Installation position ⇒ page 71

5 - To expansion tank
- ❑ ⇒ Item 12 (page 68)

6 - From expansion tank
- ❑ ⇒ Item 13 (page 68)

7 - To heat exchanger

8 - From heat exchanger

9 - Seal
- ❑ Renew

10 - Coolant pipe

11 - Retaining clip

12 - Thermostat housing

13 - 10 Nm

14 - Coolant temperature sender -G62-
- ❑ With coolant temperature display sender -G2- .

15 - Plug

16 - To top of radiator
- ❑ ⇒ Item 7 (page 68)

17 - From bottom of radiator
- ❑ ⇒ Item 7 (page 68)

Protected by copyright. Copying for private or commercial purposes, in part or in whole, is not permitted unless authorised by Volkswagen AG. Volkswagen AG does not guarantee or accept any liability with respect to the correctness of information in this document. Copyright by Volkswagen AG.
satelettronica

Protected by copyright. Copying for private or commercial purposes, in part or in whole, is not permitted unless authorised by Volkswagen AG. Volkswagen AG does not guarantee or accept any liability with respect to the correctness of information in this document. Copyright by Volkswagen AG.

1.3.2 Thermostat side, engine codes AEE, AER, AEX, AKV, ALL, ANX, APQ

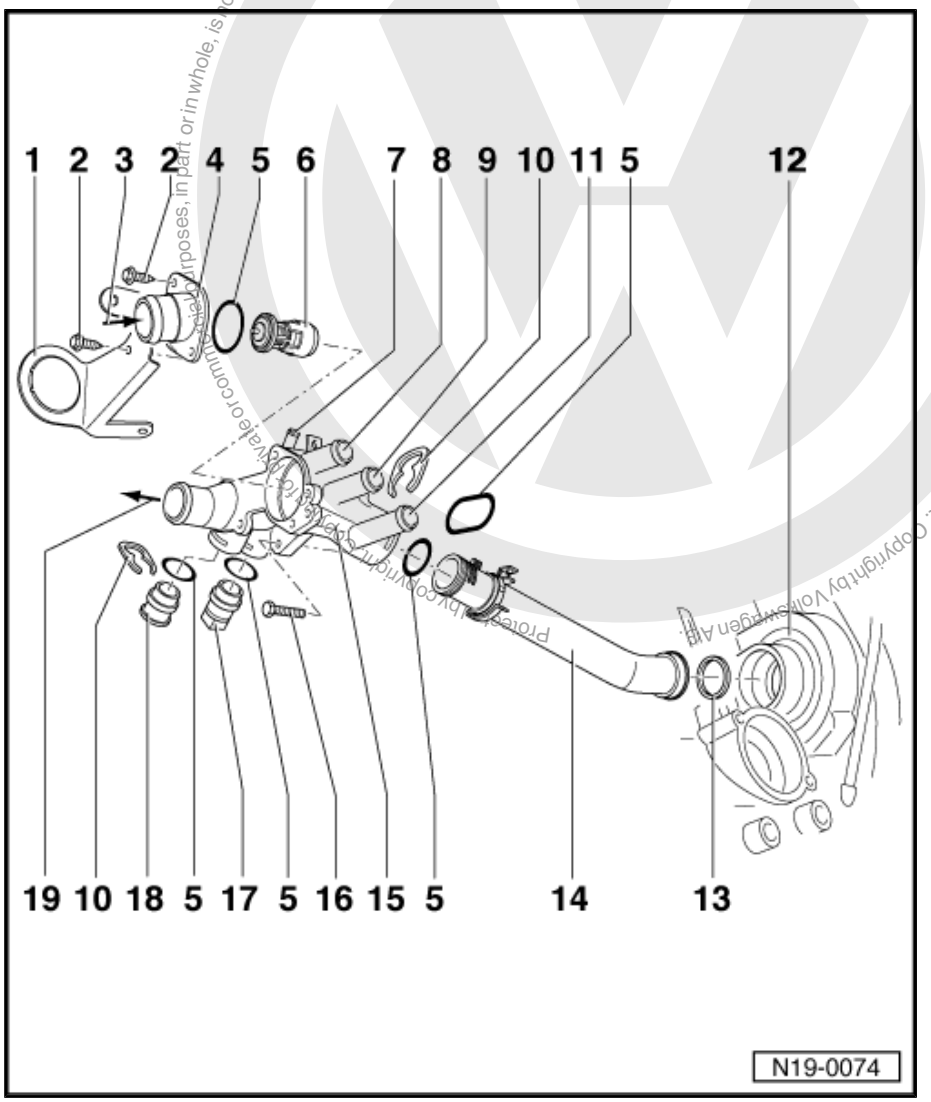

1 - Bracket
- ❑ For central connector

2 - Self-tapping bolt

3 - From bottom of radiator
- ❑ ⇒ Item 7 (page 68)

4 - Connection

5 - O-ring
- ❑ Renew

6 - Thermostat
- ❑ Check function: Heat up thermostat in water. The pin of the thermal element must move out.
- ❑ Temperature check: Opening starts (approx. 84 °C) and ends (approx. 98 °C) cannot be checked.

7 - To expansion tank
- ❑ ⇒ Item 12 (page 68)

8 - To heat exchanger

9 - From expansion tank
- ❑ ⇒ Item 13 (page 68)

10 - Retaining clip

11 - From heat exchanger

12 - Coolant pump housing on cylinder block

13 - Seal
- ❑ Renew

14 - Coolant pipe

15 - Thermostat housing

16 - 10 Nm

17 - Coolant temperature sender -G62-
- ❑ With coolant temperature display sender -G2- .

18 - Plug

19 - To top of radiator
- ❑ ⇒ Item 7 (page 68)

satelettronica

1.3.3 Coolant pump side

1 - O-ring or seal
- ❑ Renew

2 - Coolant pump
- ❑ Check for ease of movement
- ❑ If damaged or leaking, renew complete.

3 - Toothed belt guard, coolant pump

4 - 20 Nm

5 - Toothed belt guard upper part

6 - 10 Nm

7 - Toothed belt guard lower part

8 - Toothed belt
- ❑ Check for wear
- ❑ Do not kink
- ❑ Removing, installing and tensioning ⇒ page 14

9 -

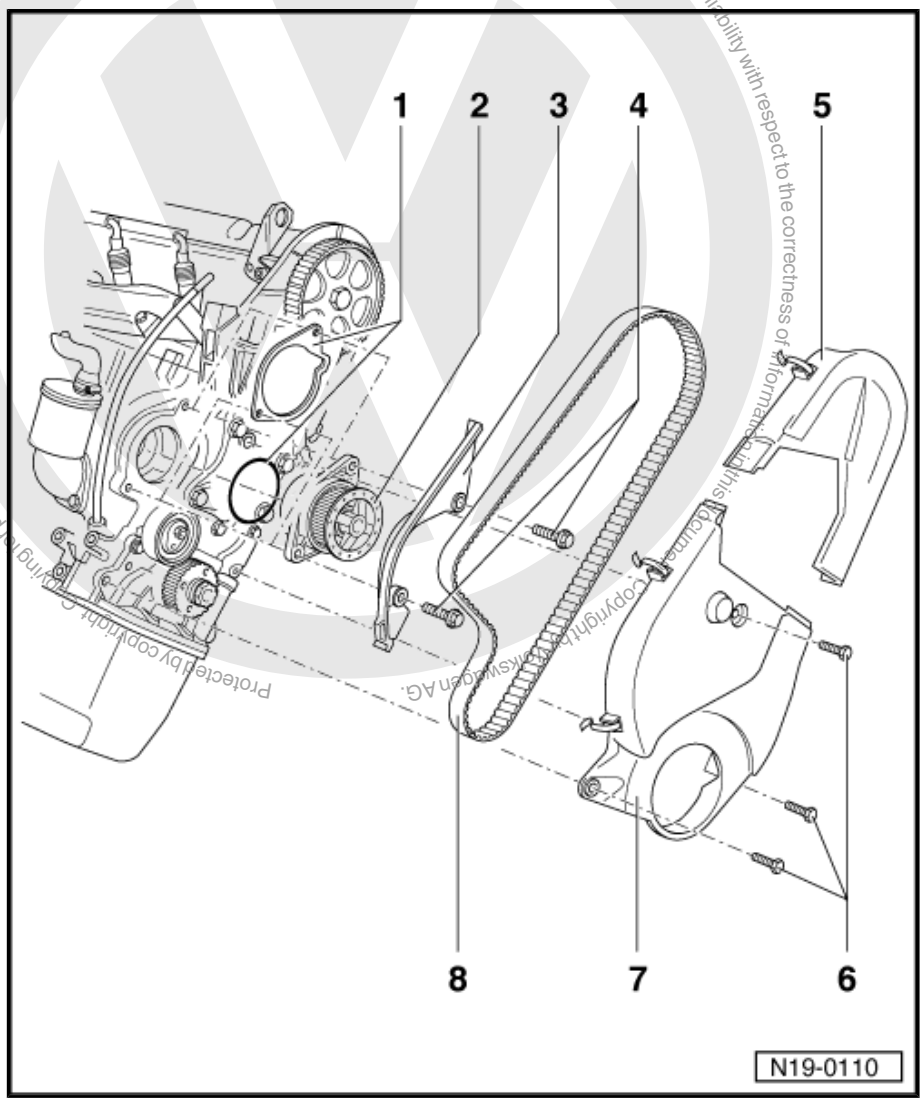

1.3.4 Installation position of thermostat for engine codes ADX, AEA, AEV

The pin on the thermostat must seat in the cut-out in the union.

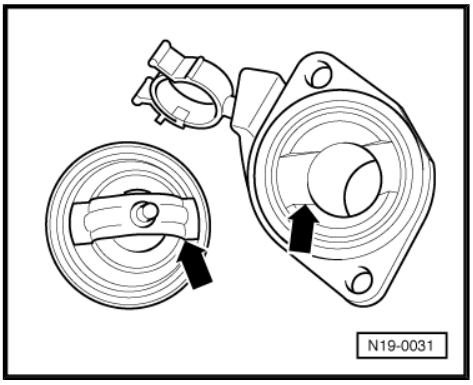

1.4 Draining and filling coolant

Special tools and workshop equipment required

satelettronica

- Drip tray -V.A.G 1306-

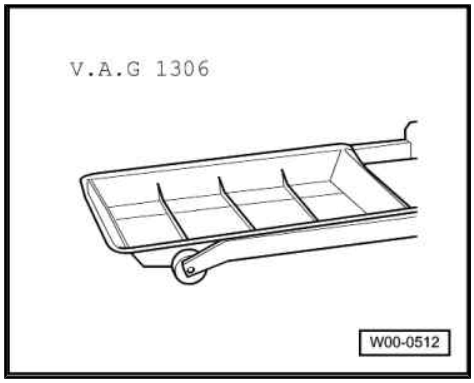

- Hose clip pliers -V.A.G 1921-

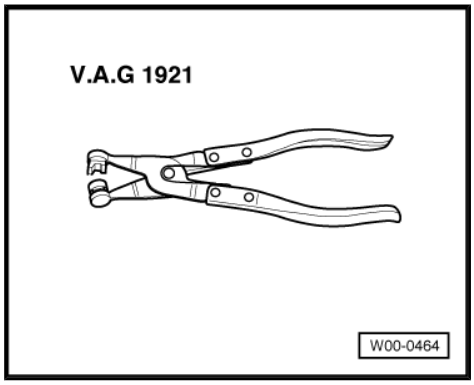

1.4.1 Draining

– Open cap on coolant expansion tank.
– Then drain coolant through lower hose on radiator.

Note

Observe environmental regulations for disposal!

Protected by copyright. Copying for private or commercial purposes, in part or in whole, is not permitted unless authorised by Volkswagen AG. Volkswagen AG does not guarantee or accept any liability with respect to the correctness of information in this document. Copyright by Volkswagen AG.

satelettronica

1.4.2 Filling

With cooling system charge unit -VAS 6096- ⇒ page 73

Without cooling system charge unit -VAS 6096- ⇒ page 74

With or without cooling system charge unit -VAS 6096-
⇒ page 74

Note

- *Only use coolant additive G12 in accordance with TL VW 774 F. Identification: purple colour.*
- *G12 purple (in accordance with TL W 774 F) can be mixed with existing coolant additives G11 and G12 red!*
- *G12 and coolant additives marked "In accordance with TL VW 774 F" prevent frost and corrosion damage, scaling and also raise boiling point of coolant. Therefore, the cooling system must be filled all-year-round with frost and corrosion protection additives.*
- *Because of its high boiling point, the coolant improves engine reliability under heavy loads, particularly in countries with tropical climates.*
- *Frost protection is required down to about -25 °C (in countries with arctic climates: down to about -35 °C).*
- *The coolant concentration must not be reduced by adding water even in warmer seasons and in warmer countries. The coolant additive must be at least 40 % of mixture.*
- *If for climatic reasons greater frost protection is required, the amount of G12 can be increased, but only up to 60 % (frost protection to about -40 °C). Otherwise frost protection and cooling effectiveness will be reduced.*
- *If radiator, heat exchanger, cylinder head or cylinder head gasket is renewed, do not reuse old coolant.*
- *Only use G12 as additive when filling cooling system.*
- *Only G12 may be used in engines with an aluminium cylinder block.*

Recommended mixture ratios:

Frost protection to	Anti-freeze quantity	G12[8)]	Water[8)]
-25 °C -35 °C	40 % 50 %	2.25 l 2.8 l	3.35 l 2.8 l

8) The quantity of coolant can vary depending upon vehicle equipment.

1.4.3 With cooling system charge unit -VAS 6096-

– Fill coolant circuit using cooling system charge unit -VAS 6096- ⇒ operating instructions for cooling system charge unit -VAS 6096- .

satelettronica
Copyright by Volkswagen AG. Copying for private or commercial purposes, in part or in whole, is not permitted unless authorised by Volkswagen AG. Volkswagen AG does not guarantee or accept any liability with respect to the correctness of information in this document.

1.4.4 Without cooling system charge unit - VAS 6096-

– Fill with coolant slowly up to max. mark on expansion tank. Filling takes approx. 5 minutes.

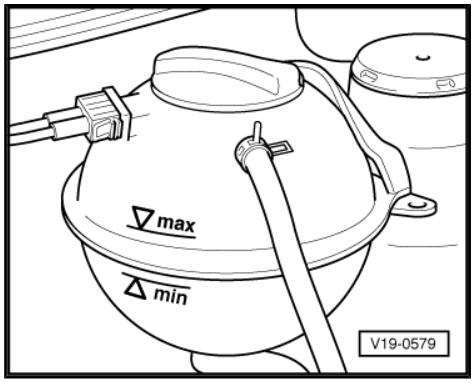

1.4.5 With or without cooling system charge unit -VAS 6096-

– Fit cap to expansion tank cap.

– Run engine until radiator fan cuts in.

– Check coolant level and top-up if necessary. When the engine is at normal operating temperature, the coolant level must be on the max. mark and between the min. and max. marks when the engine is cold.

1.5 Removing and installing radiator

Special tools and workshop equipment required

♦ Drip tray -V.A.G 1306-

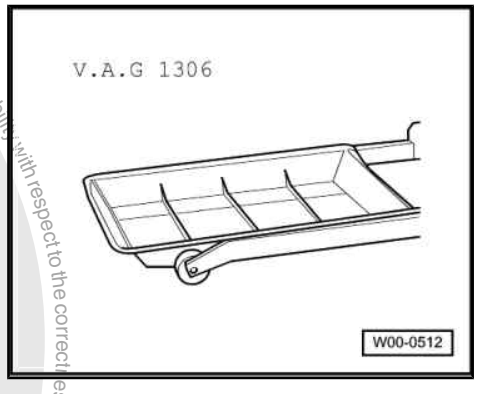

♦ Hose clip pliers -V.A.G 1921-

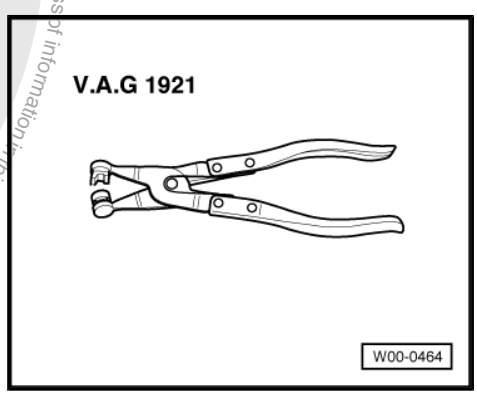

1.5.1 Removing

– First remove radiator grille and trim.

Protected by copyright. Copyright for private or commercial purposes, in part or in whole, is not permitted unless authorised by Volkswagen AG. Volkswagen AG does not guarantee or accept any liability with respect to the correctness of information in this document. Copyright by Volkswagen AG.

satelettronica

– Remove left headlight: ⇒ Electrical system; Rep. Gr. 94 ; Removing and installing headlights
– Drain coolant ⇒ page 71 .
– Pull coolant hoses off radiator.
– Pull connector off thermal switch.
– Remove catch plate for bonnet lock.
– Remove radiator securing bolts and take out radiator forwards.

Vehicles with air conditioning:

– Observe additional remarks and installation work ⇒ page 75 .

1.5.2 Installing

Install in reverse order of removal. When doing this, note the following:

– Fill with coolant ⇒ page 71 .
– Electrical connections and routing: ⇒ Current flow diagrams, Electrical fault finding and Fitting locations
– Check headlight settings and correct as necessary: ⇒ Electrical system; Rep. Gr. 94 ; Adjusting headlight

1.5.3 Additional notes and assembly work for vehicles with air conditioner

WARNING

The air conditioner refrigerant circuit must not be opened.

Note

To prevent damage to condenser and also to refrigerant lines/ hoses, ensure that the lines and hoses are not stretched, kinked or bent.

– Remove end piece from front bumper.
– Remove retaining clamp(s) for refrigerant lines.
– Remove condenser from radiator and pull forward as far as is possible.
– Carefully take radiator out forwards.
– Secure condenser to body so that refrigerant lines/hoses are not stressed.

Protected by copyright. Copying for private or commercial purposes, in part or in whole, is not permitted unless authorised by Volkswagen AG. Volkswagen AG does not guarantee or accept any liability with respect to the correctness of information in this document. Copyright by Volkswagen AG.
satelettronica

20 – Fuel supply system

1 Fuel supply system

1.1 Removing and installing parts of fuel supply system

Note

- *Always replace clamp-type clips with screw or spring-type clips.*
- *Fuel hoses in engine compartment must be secured only with spring-type clips. The use of clamp or screw-type clips is not permissible.*
- *Hose clip pliers -V.A.G 1921- are recommended for installation of spring-type clips.*

Observe safety precautions ⇒ page 79

Observe rules for cleanliness ⇒ page 79 .

Adjusting accelerator cable ⇒ page 87 .

Removing and installing accelerator pedal ⇒ page 79 .

1.1.1 Removing and installing fuel tank with attachments and fuel filter

Protected by copyright. Copyright by Volkswagen AG. Volkswagen AG does not guarantee or accept any liability with respect to the correctness of information in this document. Copyright by Volkswagen AG. Reproduction in whole or in parts is not permitted without authorised by Volkswagen AG.
satelettronica

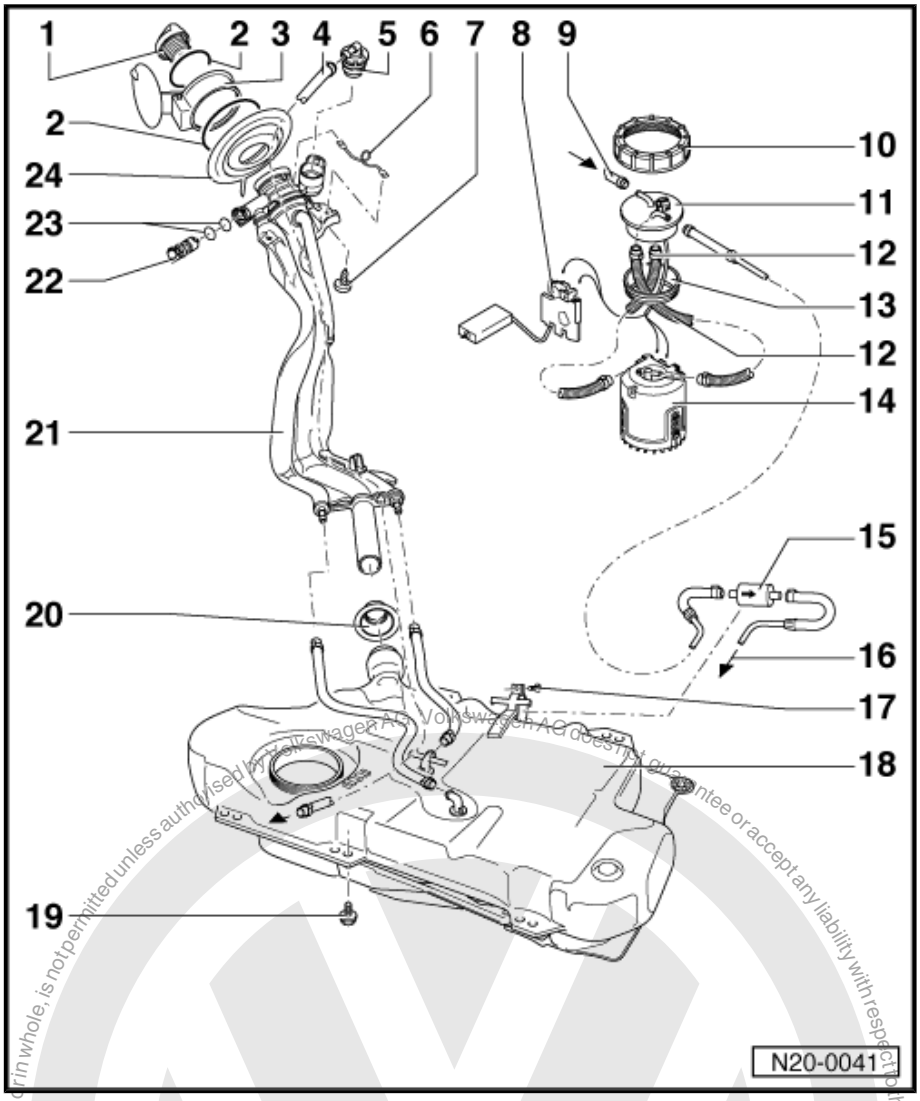

1 - Sealing cap

2 - Retaining ring

3 - Tank flap unit

- ❑ Removing and installing ⇒ General body repairs, exterior; Rep. Gr. 55 ; Tank flap unit; Removing and installing fuel tank flap unit

4 - Breather line

- ❑ To activated charcoal filter

- ♦ Engine codes: ADX, AEA, AEV ⇒ Item 7 (page 88)
- ♦ Engine codes: AEE, AER, AEX, AKV, ALL, ANX, APQ ⇒ Item 5 (page 89)

5 - Gravity/overflow valve

- ❑ To remove, release locking lug and unclip valve upwards out of filler neck
- ❑ Check valve for through-flow valve vertical: open, valve tilted 90 °: closed

6 - Earth connection

7 - 4 Nm

8 - Fuel gauge sender -G-

- ❑ Adjusting: ⇒ Current flow diagrams, Electrical fault finding and Fitting locations

9 - Return hose/line

- ❑ Blue or with blue marking
- ❑ From injection unit or fuel rail ⇒ Engine - Mixture preparation; Rep. Gr. 24 ; Repairing injection component

10 - Union nut, 75 Nm

- ❑ Remove and install using union nut tool -3217-

11 - Flange

- ❑ Note installation position on fuel tank ⇒ page 78

12 - Corrugated tube

- ❑ Must not touch the fuel tank, otherwise pump noises will be transferred.

13 - Seal

- ❑ Moisten with fuel when installing
- ❑ Renew if damaged

14 - Fuel delivery unit

- ❑ Removing and installing ⇒ page 85
- ❑ Checking fuel pump ⇒ page 80

Protected by copyright. Copying for private or commercial purposes, in part or in whole, is not permitted unless authorised by Volkswagen AG. Volkswagen AG does not guarantee or accept any liability with respect to the correctness of information in this document. Copyright by Volkswagen AG.
satelettronica

Note

Ensure, on completion of all work on the fuel delivery unit and fuel gauge that the corrugated tube between the fuel delivery unit and flange does not touch the fuel tank (transfer of pumping noises).

15 - Fuel filter

- ❑ Installation position: arrow points in direction of flow.

16 - Supply line

- ❑ Black
- ❑ To injection unit or fuel rail ⇒ Engine - Mixture preparation; Rep. Gr. 24 ; Repairing injection component

17 - 3 Nm

18 - Fuel tank

- ❑ Removing and installing ⇒ page 86
- ❑ Press lock washer from heat shield firmly to pin on vehicle floor.

19 - 25 Nm

20 - Protective boot

- ❑ After installing filler neck push over fuel tank filler neck

21 - Filler neck

- ❑ With non-return valve.

22 - Breather valve

- ❑ Checking ⇒ page 79
- ❑ To remove pull locking latch lightly to inside -arrow- and pull valve out

23 - O-ring

- ❑ Renew if damaged

24 - Cup

- ❑ For filler neck

1.1.2 Installation position of fuel delivery unit flange

Marking on the flange must align with marking on the fuel tank.

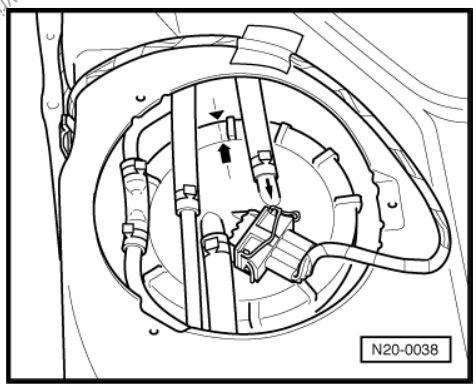

Protected by copyright. Copying for private or commercial purposes, in part or in whole, is not permitted unless authorised by Volkswagen AG. Volkswagen AG does not guarantee or accept any liability with respect to the correctness of information in this document. Copyright by Volkswagen AG.

satelettronica

1.1.3 Checking breather valve

Lever in rest position: closed

Lever pushed in direction of arrow: open

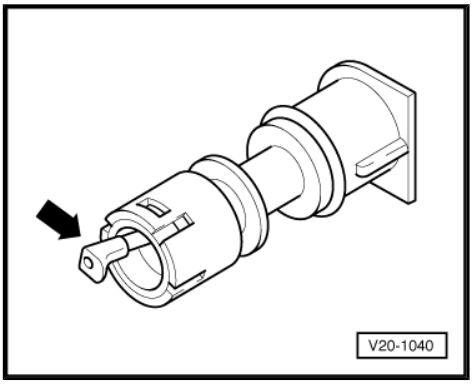

1.1.4 Removing and installing accelerator pedal

To remove accelerator pedal, carefully press accelerator pedal shaft locking mechanism out of bore -arrow-. Then turn shaft with a 6 mm Allen key until it can be pulled out.

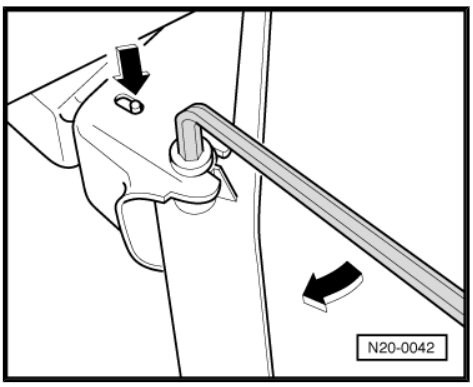

1.2 Safety precautions when working on fuel supply system

WARNING

Fuel supply lines are under pressure! Before loosening hose connections, wrap a cloth around the connection. Then release pressure by carefully pulling hose off connection.

When removing and installing fuel gauge sender or fuel pump (fuel delivery unit) from a full or partly full fuel tank, observe the following:

- Before beginning work, place an extraction hose close to sender opening in fuel tank to extract escaping fuel fumes and switch on exhaust extraction system. If no exhaust extraction system is available, a radial fan with a displacement greater than 15 m^3/h can be used providing that motor is not in air flow.
- Prevent skin contact with fuel! Wear fuel-resistant gloves!

1.3 Rules for cleanliness

When working on the fuel supply and injection system, pay careful attention to the following "5 rules" for cleanliness:

- Clean connection points and surrounding areas thoroughly before separating.
- Place removed parts on clean surface and cover over. Use only lint-free cloths.
- If repairs are not carried out immediately, cover over or seal components which have been opened.
- Install only clean parts: do not remove replacement parts from packaging until immediately prior to installation. Do not use

Protected by copyright. Copying for private or commercial purposes, in part or in whole, is not permitted unless authorised by Volkswagen AG. Volkswagen AG does not guarantee or accept any liability with respect to the correctness of information in this document. Copyright by Volkswagen AG.
satelettronica

Protected by copyright. Copying for private or commercial purposes, in part or in whole, is not permitted unless authorised by Volkswagen AG. Volkswagen AG does not guarantee or accept any liability with respect to the correctness of information in this document. Copyright by Volkswagen AG.

parts that have not been stored in their original packaging (e.g. in toolboxes).

- If system is open: do not use compressed air if possible. Do not move vehicle unless absolutely necessary.

1.4 Checking fuel pump

Special tools and workshop equipment required

- Multimeter -V.A.G 1715-
- Remote control for V.A.G 1348 -V.A.G 1348/3A- with adapter cable -V.A.G 1348/3-2-
- Voltage tester -V.A.G 1527B-
- Auxiliary measuring set -V.A.G 1594A-
- Key for union nut -3217-
- K-Jetronic pressure tester -V.A.G 1318-

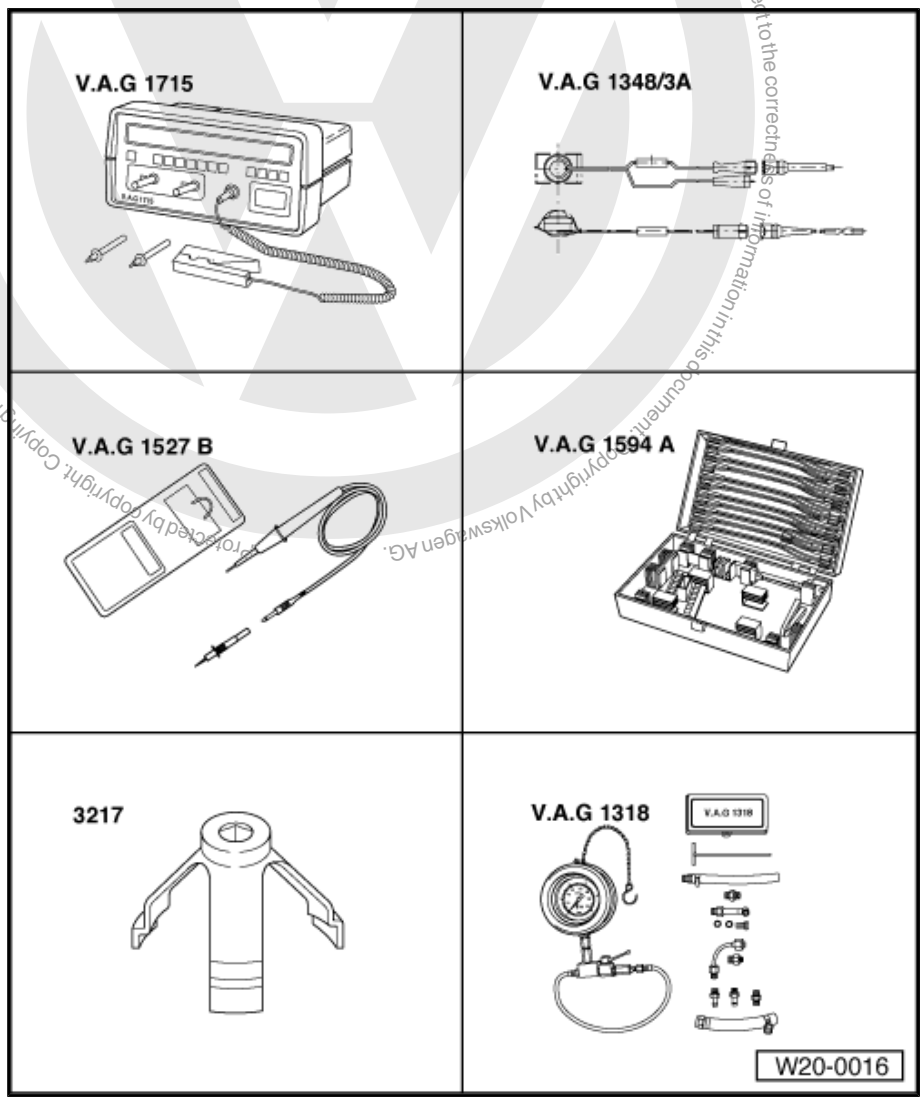

satelettronica

- Adapter -V.A.G 1318/1-
- Adapter -V.A.G 1318/11-
- Adapter -V.A.G 1318/17-
- Connector -V.A.G 1318/23-
- Torque wrench -V.A.G 1332-
- Measuring container
- Current flow diagram

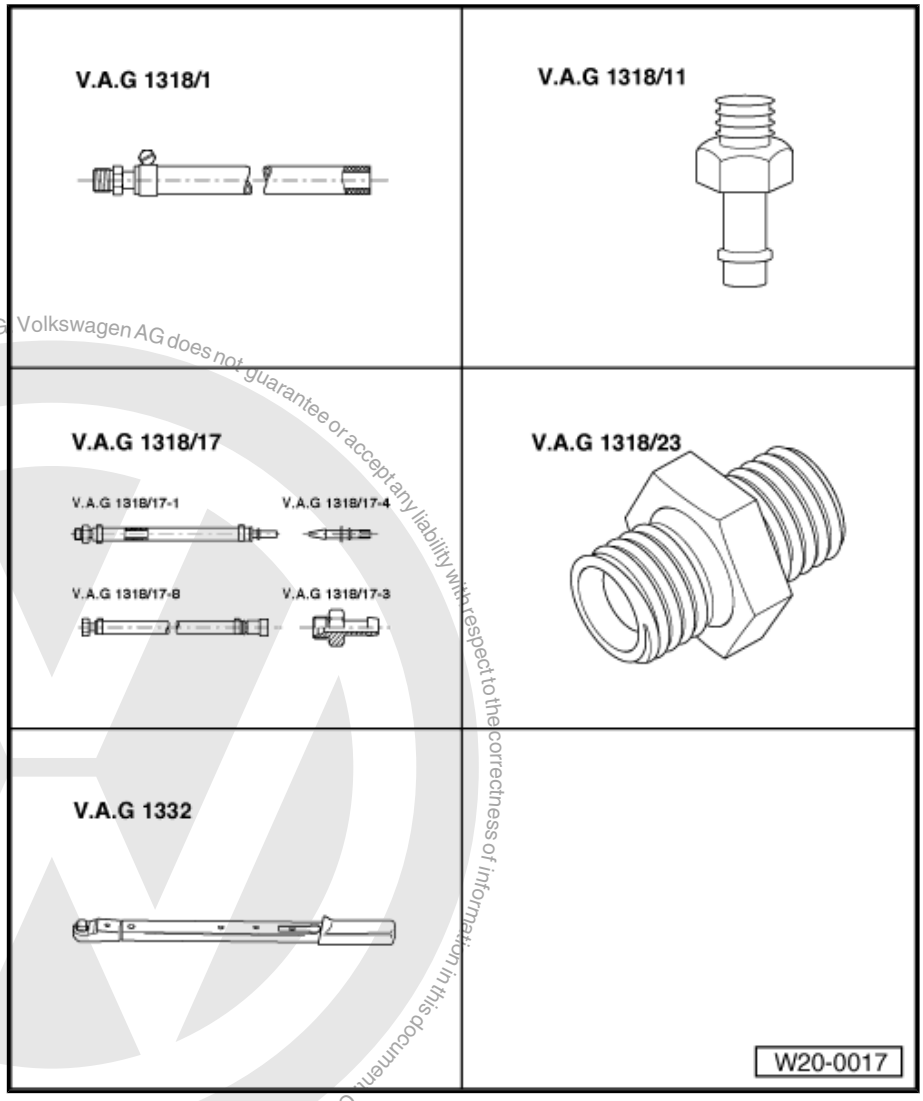

Volkswagen AG does not guarantee or accept any liability with respect to the correctness of information in this document. Copyright by Volkswagen AG. Protected by copyright. Copying for private or commercial purposes, in part or in whole, is not permitted unless authorised by Volkswagen AG.

1.4.1 Checking function and voltage supply

Test prerequisites

- The battery voltage must be OK.
- Fuse 18 must be OK.

Note

Before carrying out further work, battery earth strap may have to be disconnected. First check whether a coded radio is fitted. Obtain anti-theft coding first if necessary.

– Operate the starter briefly. Fuel pump must be heard to run briefly (approx. 1 second).

If the fuel pump does not start:

satelettronica

– Pull fuel pump relay -J17- out of relay plate with fuse holder (Relay position 12).

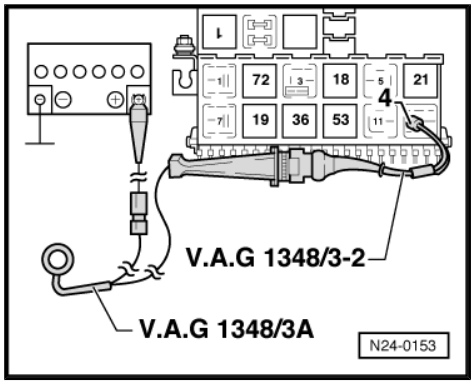

Note

Disconnect battery earth strap if the relay cannot be pulled out of the relay plate without the use of tools.

– Connect remote control for V.A.G 1348 -V.A.G 1348/3A- with adapter cable -V.A.G 1348/3-2- to contact 4 and battery positive (+).

– Operate remote control.

Fuel pump runs:

– Check activation of fuel pump relay:

Engine codes ADX, AEA, AEV: ⇒ Mono-Motronic Injection and Ignition System; Rep. Gr. 01; Self-diagnosis; Final control diagnosis

Engine code AEE: ⇒ 1AV Injection and Ignition System; Rep. Gr. 01; Self-diagnosis; Final control diagnosis

Engine codes AER, AEX, AKV, ALL, ANX, APQ: ⇒ Current flow diagrams, Electrical fault finding and Fitting locations

Fuel pump is not running:

– Fold rear bench seat forwards.

– Remove luggage compartment floor.

– Pull 4-pin connector -1- off fuel tank flange-2-.

– Connect voltage tester -V.A.G 1527B- to outer contacts of connector using auxiliary cables from auxiliary measuring set -V.A.G 1594/1- .

– Operate remote control. LED must light up.

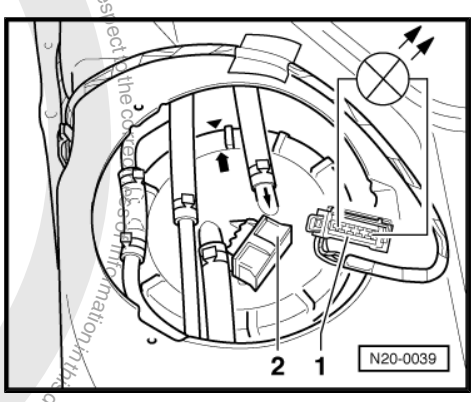

If LED does not light up:

– Locate and eliminate open circuit referring to current flow diagram.

If LED lights up (voltage supply OK):

– Unscrew union nut from flange using union nut tool -3217- .

– Check that electrical wires between flange and fuel pump are connected.

If no open circuit can be found:

– Renew fuel delivery unit.

1.4.2 Checking delivery rate

Test prerequisites

- Voltage supply for fuel pump OK.
- Remote control for V.A.G 1348 -V.A.G 1348/3A- is still connected.

1.4.3 Test sequence

– Remove filler cap from fuel tank filler neck.

Protected by copyright. Copyright by Volkswagen AG. Volkswagen AG does not guarantee or accept any liability with respect to the correctness of information in this document. Copyright by Volkswagen AG.
satelettronica

Protected by copyright. Copyright by Volkswagen AG. Volkswagen AG does not guarantee or accept any liability with respect to the correctness of information in this repair manual. Copyright by Volkswagen AG. Reproduction, publication and distribution to third parties not permitted unless authorised by Volkswagen AG.

WARNING

Fuel supply lines are under pressure! Before loosening hose connections, wrap a cloth around the connection. Then release pressure by carefully pulling hose off connection.

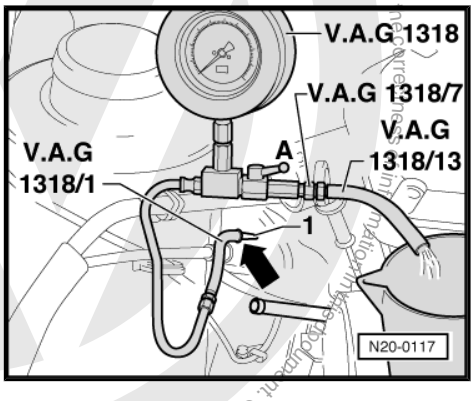

- Pull fuel supply hose (white marking) off fuel supply line -1-.
- Connect K-Jetronic pressure tester -V.A.G 1318- to supply line using adapter /1.
- Screw hose -V.A.G 1318/13- to measuring device using adapter -V.A.G 1318/6+7- and hold hose in a measuring container.
- Open measuring device shut-off tap. The lever then points in the direction of flow -A-.
- Operate remote control for V.A.G 1348 -V.A.G 1348/3A- . Then slowly close shut-off tap until the gauge shows a pressure of: engine codes ADX, AEA, AEV: 1.2 bar: engine codes AEE, AER, AEX, AKV, ALL, ANX, APQ: 3 bar.
- From this point on do not move position of shut-off tap.
- Empty measuring container.
- The quantity delivered by the fuel pump depends on the battery voltage. Therefore, connect multimeter to vehicle battery using adapter cables from measuring cables -V.A.G 1594/1- .
- Operate remote control for 30 seconds while measuring battery voltage.
- Compare quantity of fuel delivered with specification.

Engine codes ADX, AEA, AEV

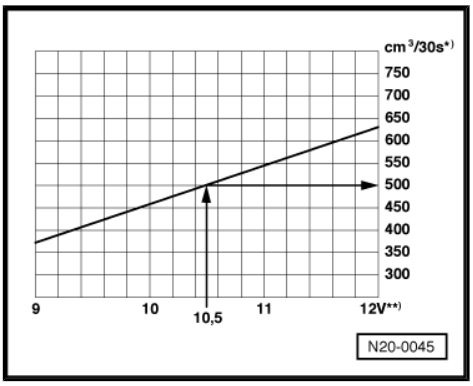

*) Minimum delivery rate cm^3/30 seconds

**) Voltage at fuel pump with engine not running and pump running (approx. 2 volts less than battery voltage).

Example:

During the test a voltage of 12.5 volts is measured at the battery. As the voltage at the pump is approx. 2 volts less than the battery voltage, this will equate to a minimum delivery rate of 500 cm^3/30 s.

Engine codes AEE, AER, AEX, AKV, ALL, ANX, APQ

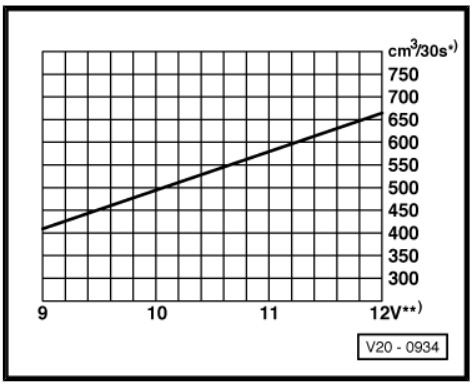

*) Minimum delivery rate cm^3/30 seconds

**) Voltage at fuel pump with engine not running and pump running (approx. 2 volts less than battery voltage).

If the minimum delivery rate is not attained:

- Check fuel lines for possible restrictions (kinks) or blockages.

satelettronica

– Pull supply hose -1- off fuel filter inlet.

– Connect K-Jetronic pressure tester -V.A.G 1318- with adapter set -V.A.G 1318/10-12- to hose.

– Repeat delivery rate check.

If the minimum delivery rate is now attained:

– Renew fuel filter.

If the minimum delivery rate is again not attained:

– Remove fuel delivery unit and check for dirt in filter strainer.

Only if still no fault has been detected:

– Renew fuel delivery unit.

If delivery rate has been attained, but nevertheless you suspect a fuel supply system fault (e.g. intermittent failure of fuel supply system)

– Check current consumption of fuel pump as follows:

– Reconnect all disconnected fuel lines.

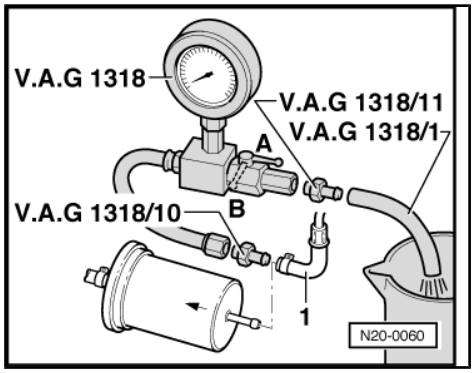

– Connect multimeter -V.A.G 1715- using pick-up clamp to the red/yellow wire in wiring harness.

– Start engine and run at idling speed.

– Measure current consumption of fuel pump. Specification: max. 8 amps

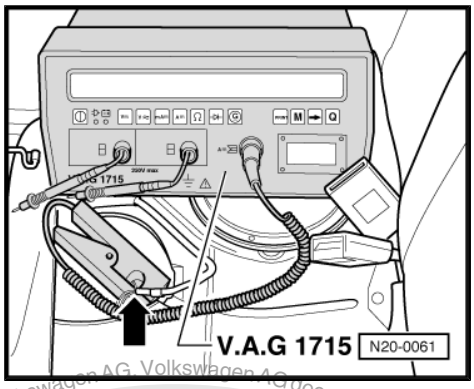

Note

If the fuel system malfunction is intermittent, you can perform the check during a road test, but a 2nd person is necessary.

If current consumption is exceeded:

– Renew fuel delivery unit.

1.4.4 Checking fuel pump non-return valve

Test sequence

- Remote control for V.A.G 1348 -V.A.G 1348/3A- is still connected.
- K-Jetronic pressure tester -V.A.G 1318- is still connected.

Note

At the same time, this test checks for leaks in the fuel supply line connections from the fuel delivery unit to the point at which the K-Jetronic pressure tester -V.A.G 1318- is connected.

– Close pressure gauge shut-off tap (lever at right angles to direction of flow).

– Briefly operate the remote control until a pressure of: engine codes ADX, AEA, AEV: 2 bar: engine codes AEE, AER, AEX, AKV, ALL, ANX, APQ: 3 bar is created.

Protected by copyright. Copying for private or commercial purposes, in part or in whole, is not permitted unless authorised by Volkswagen AG. Volkswagen AG does not guarantee or accept any liability with respect to the correctness of information in this document. Copyright by Volkswagen AG.
satelettronica

Protected by copyright. Copyright by Volkswagen AG. Volkswagen AG does not guarantee or accept any liability with respect to the correctness of information in this document. Copyright by Volkswagen AG. Not permitted unless authorised by Volkswagen AG. Not for commercial purposes, in part or in whole, is not permitted unless authorised by Volkswagen AG.

WARNING

Danger of spray when opening shut-off tap. Hold container over free connection of pressure tester.

– If pressure builds up too high, relieve excess pressure by carefully opening cut-off tap.

– Observe pressure drop on pressure gauge. After 10 minutes the pressure must not drop below: engine codes ADX, AEA, AEV: 1.2 bar: engine codes AEE, AER, AEX, AKV, ALL, ANX, APQ: 2 bar.

If the pressure drops further:

– Check line connections for leaks.

If no fault in lines is detected:

– Renew fuel delivery unit.

1.5 Removing and installing fuel delivery unit

Special tools and workshop equipment required

♦ Torque wrench -V.A.G 1332-

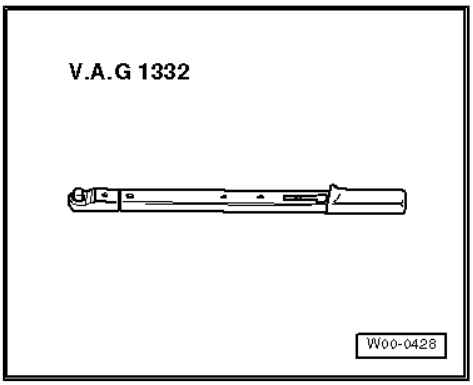

♦ Key for union nut -3217-

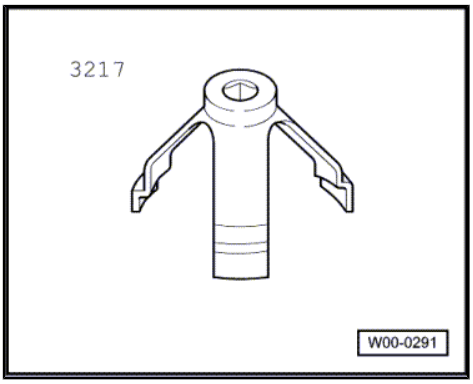

1.5.1 Removing

– First check whether a coded radio is fitted. If so, obtain anti-theft coding.

– Note safety precautions before starting work ⇒ page 79 .

– With the ignition switched off, disconnect battery earth strap.

– Fold rear bench seat forwards.

– Remove luggage compartment floor.

satelettronica

– Pull connector -1- and supply and return lines -2 and 3- off flange.
– Unscrew union nut from flange using union nut tool -3217- .
– Pull flange and seal out of opening in fuel tank.
– Now release the fuel delivery unit from the bayonet connection by turning it to the left and remove unit from fuel tank.

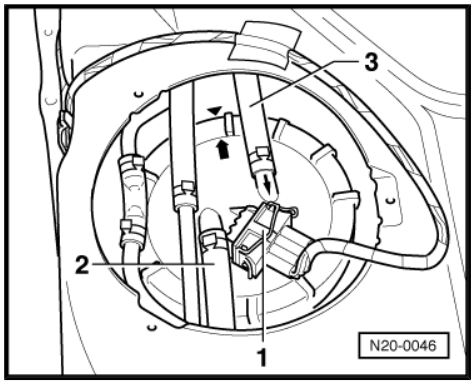

Note

If delivery unit is to be renewed, drain old delivery unit before disposal.

1.5.2 Installing

– Installation of fuel delivery unit is carried out in reverse order.

Note

- *When inserting fuel delivery unit, ensure that fuel gauge sender is not bent.*
- *On correct installation of fuel delivery unit, fuel gauge float points towards fuel tank filler unit.*
- *Coat flange seal with fuel when fitting.*
- *Fitting position of fuel delivery unit flange* ⇒ page 78

1.6 Removing and installing fuel tank

1.6.1 Removing

– First check whether a coded radio is fitted. If so, obtain anti-theft coding.
– With the ignition switched off, disconnect battery earth strap.
– Fold rear bench seat forwards.
– Remove luggage compartment floor.
– Pull fuel return hose -1- and connector -2- off flange.
– Disconnect fuel supply line -3- and breather line -4- at connecting hoses.
– Now drain/empty fuel tank.

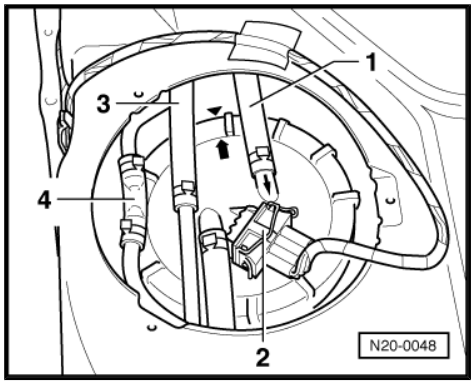

Protected by copyright. Copyright by Volkswagen AG. Volkswagen AG does not guarantee or accept any liability with respect to the correctness of information in this document. Copying for private or commercial purposes, in part or in whole, is not permitted unless authorised by Volkswagen AG.
satelettronica

– Unbolt connecting strut -1- from body.
– Unscrew all rear exhaust system retainers from body. Support lowered exhaust system on body with suitable wire.
– Remove right rear wheel.
– Unbolt filler neck from body.
– Remove cap from filler neck and unclip filler neck from cup
– Disconnect fuel tank and lower tank.
– Remove filler neck.
– Now the fuel tank can be unbolted from the body and removed together with the heat shield.

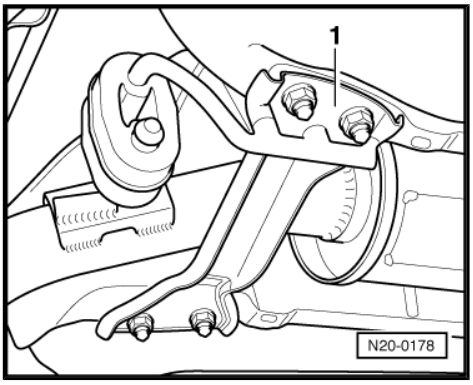

1.6.2 Installing

Install in reverse order of removal. When doing this, note the following:

♦ Install breather and fuel hoses free of kinks.
♦ Secure fuel hoses with screw-type clips.
♦ Do not interchange supply and return hose (return hose blue or blue markings, supply hose black).

1.7 Adjusting accelerator cable

– Adjust accelerator cable by moving the retainer at the support bracket so that the full throttle position is just attained at the throttle valve lever.

Engine codes ADX, AEA, AEV

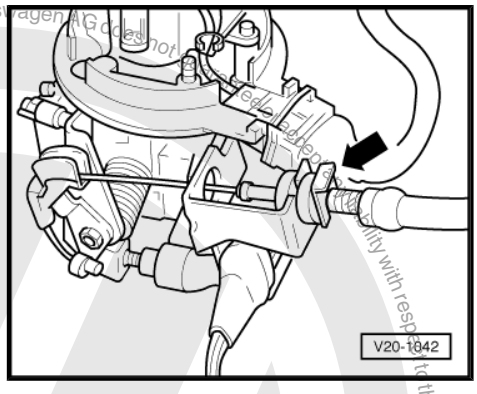

Engine codes AEE, AER, AEX, AKV, ALL, ANX, APQ

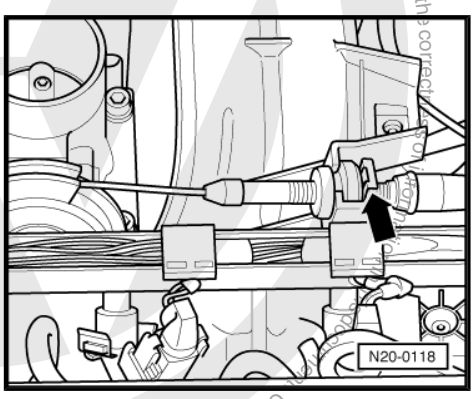

1.8 Removing and installing parts of activated charcoal filter system

1.8.1 Engine codes ADX, AEA, AEV

Protected by copyright. Copying for private or commercial purposes, in part or in whole, is not permitted unless authorised by Volkswagen AG. Volkswagen AG does not guarantee or accept any liability with respect to the correctness of information in this document. Copyright by Volkswagen AG.
satelettronica

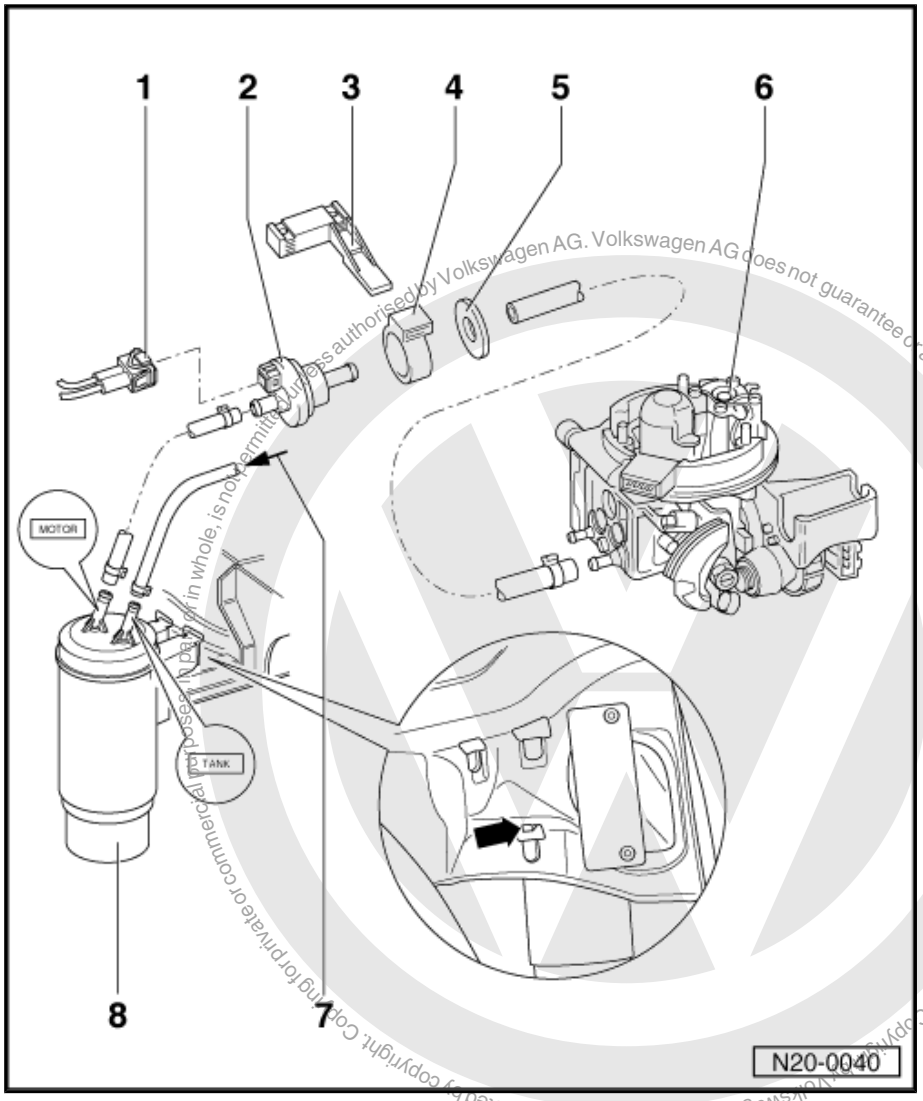

1 - Connector

2 - Activated charcoal filter solenoid valve 1 -N80-

- ❑ With ignition switched off, open valve in direction of arrow.
- ❑ When engine is warm, valve will be activated (pulsed) by Mono-Motronic control unit
- ❑ Checking: ⇒ Engine - Mixture preparation; Rep. Gr. 01 ; Final control diagnosis

3 - Bracket

- ❑ On right suspension turret

4 - Retaining ring

5 - Washer

- ❑ To stop valve slipping out

6 - Injector

7 - Breather line

- ❑ From gravity/overflow valve on fuel tank
  ⇒ Item 4 (page 77)

8 - Activated charcoal filter

- ❑ Location: In front right wheel housing.
- ❑ Connecting piece “MOTOR” to activated charcoal filter solenoid valve 1 -N80-
  ⇒ Item 2 (page 88)
- ❑ Connection “TANK” with vacuum non-return valve
- ❑ To remove, release securing tab -arrow- and push container out upwards

Protected by copyright. Copying for private or commercial purposes, in whole or in part, is not permitted unless authorised by Volkswagen AG. Volkswagen AG does not guarantee or accept any liability with respect to the correctness of information in this document. Copyright by Volkswagen AG.
satelettronica

1.8.2 Engine codes AEE, AER, AEX, AKV, ALL, ANX, APQ

1 - Retaining ring

2 - Bracket

- ❑ On body front right

3 - Activated charcoal filter solenoid valve 1 -N80-

- ❑ Valve closed with ignition switched off
- ❑ When engine is warm, valve will be activated (pulsed) by 1AV or Motronic control unit
- ❑ Checking: ⇒ Engine - Mixture preparation; Rep. Gr. 01 ; Final control diagnosis

4 - Connector

5 - Breather line

- ❑ From gravity/overflow valve on fuel tank
  ⇒ Item 4 (page 77)

6 - Throttle valve module - J338-

7 - Activated charcoal filter

- ❑ Location: In front right wheel housing.
- ❑ Connecting piece “MOTOR” to activated charcoal filter solenoid valve 1 -N80-
  ⇒ Item 2 (page 88)
- ❑ Connection “TANK” with vacuum non-return valve
- ❑ To remove, release securing tab -arrow- and push container out upwards

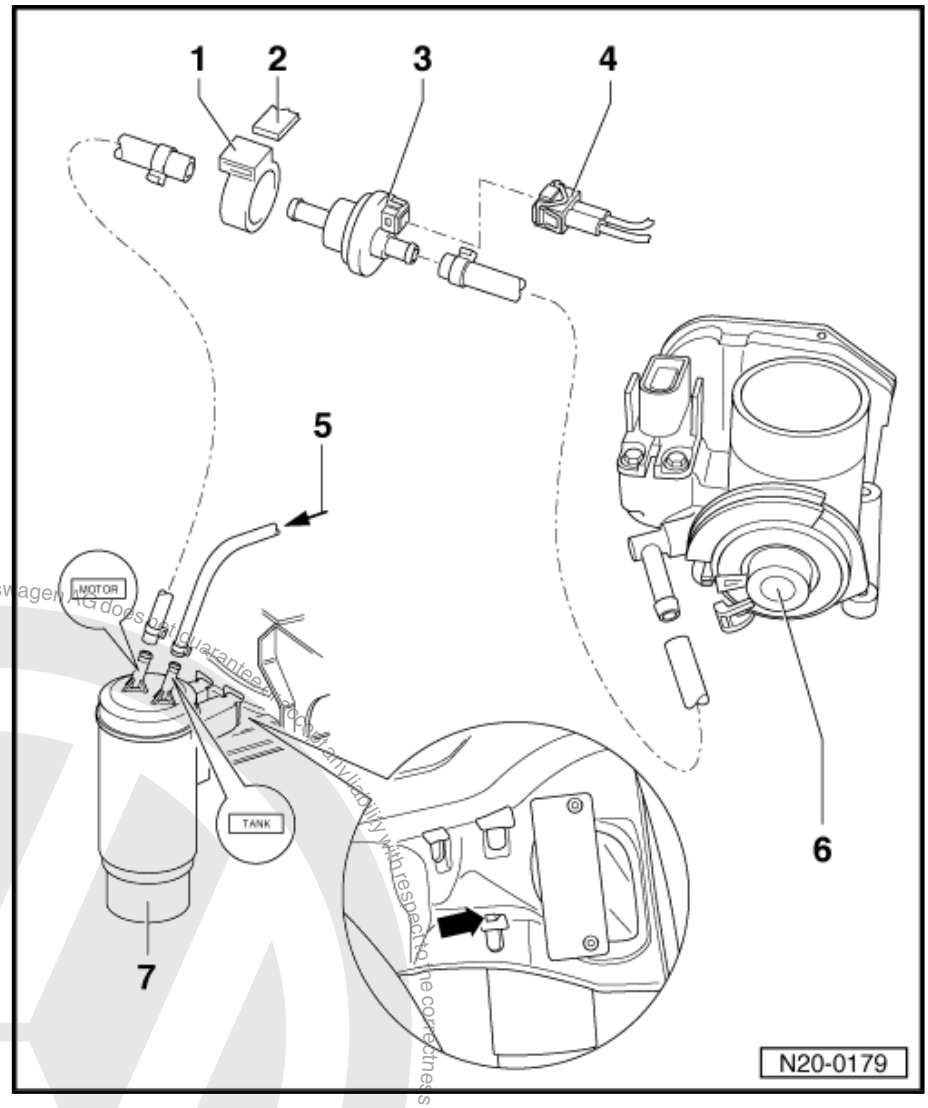

1.9 Checking fuel tank breather

Special tools and workshop equipment required

♦ Vacuum tester -V.A.G 1368-

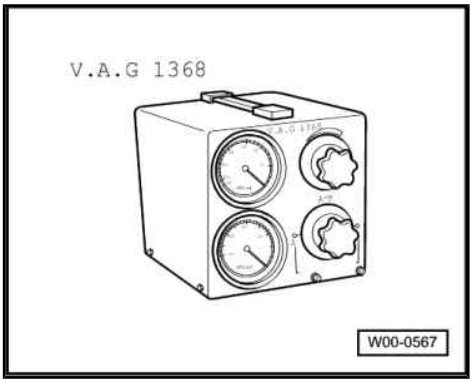

Protected by copyright. Copying for private or commercial purposes, in part or in whole, is not permitted unless authorised by Volkswagen AG. Volkswagen AG does not guarantee or accept any liability with respect to the correctness of information in this document. Copyright by Volkswagen AG.
satelettronica

♦ Hand vacuum pump -V.A.G 1390-

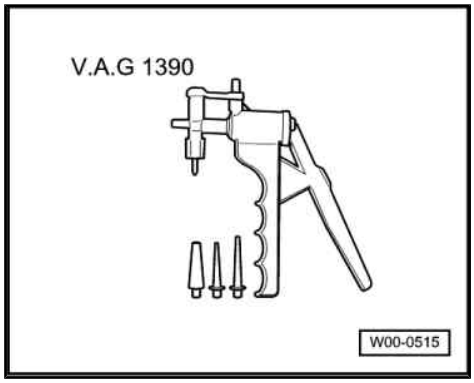

1.9.1 Test prerequisite

- Ignition must be switched off.

– First pull breather hose -1- off activated charcoal filter on solenoid valve -2-.

– Connect hand vacuum pump -V.A.G 1390- and vacuum tester -V.A.G 1368- as shown to hose -1-.

– Set vacuum tester to -A/B- position.

– Operate hand-operated vacuum pump -V.A.G 1390- several times. Vacuum must not build up.

If vacuum builds up:

– Check breather connection -3- located on bottom of activated charcoal filter -4- for soiling, clean if necessary.

If vacuum does not build up:

– Temporarily seal breather connection -3- and operate vacuum pump again several times. A vacuum must build up. (Vacuum non-return valve in activated charcoal filter must close)

If vacuum does not build up:

– Renew activated charcoal filter.

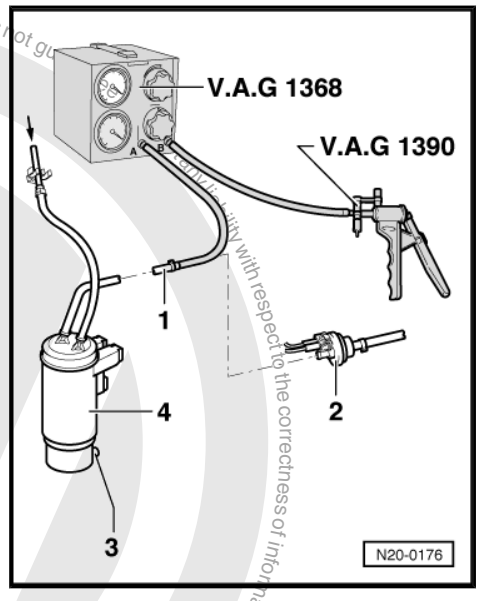

Protected by copyright. Copying for private or commercial purposes, in part or in whole, is not permitted unless authorised by Volkswagen AG. Volkswagen AG does not guarantee or accept any liability with respect to the correctness of information in this document. Copyright by Volkswagen AG.
satelettronica

1.9.2 Checking lines to fuel tank and fuel cap

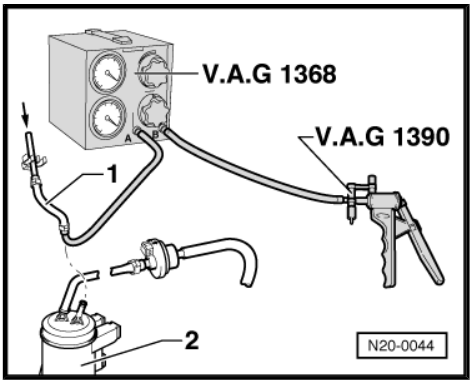

- Pull vent hose -1- from fuel tank off activated charcoal filter -2-.
- Then connect hand vacuum pump -V.A.G 1390- and vacuum tester -V.A.G 1368- as shown to hose -1-.
- Set vacuum tester to -A/B- position.
- Remove fuel filler cap.
- Operate hand-operated vacuum pump -V.A.G 1390- several times. Vacuum must not build up.

If vacuum builds up:

- Check gravity/overflow valve ⇒ Item 5 (page 77) .
- Check line -1- from fuel tank for free-flow.

If vacuum does not build up:

- Refit fuel filler cap.
- Operate hand-operated vacuum pump -V.A.G 1390- several times. Vacuum must not build up.

Note

If fuel level in tank is low the hand vacuum must be operated at least 20...30 times.

If vacuum builds up:

- Renew fuel tank cap.

Protected by copyright. Copying for private or commercial purposes, in part or in whole, is not permitted unless authorised by Volkswagen AG. Volkswagen AG does not guarantee or accept any liability with respect to the correctness of information in this document. Copyright by Volkswagen AG.
satelettronica

26 – Exhaust system

1 Exhaust system

1.1 Removing and installing parts of exhaust system

Note

- *After working on the exhaust system, ensure that the system is not under stress and that there is sufficient clearance to the bodywork. If necessary, loosen clamps and align silencer and exhaust pipe so that sufficient clearance is maintained to the bodywork and the mountings are evenly loaded.*
- *Renew self-locking nuts.*

1.1.1 Exhaust manifold, front exhaust pipe with catalytic converter, Lambda probe

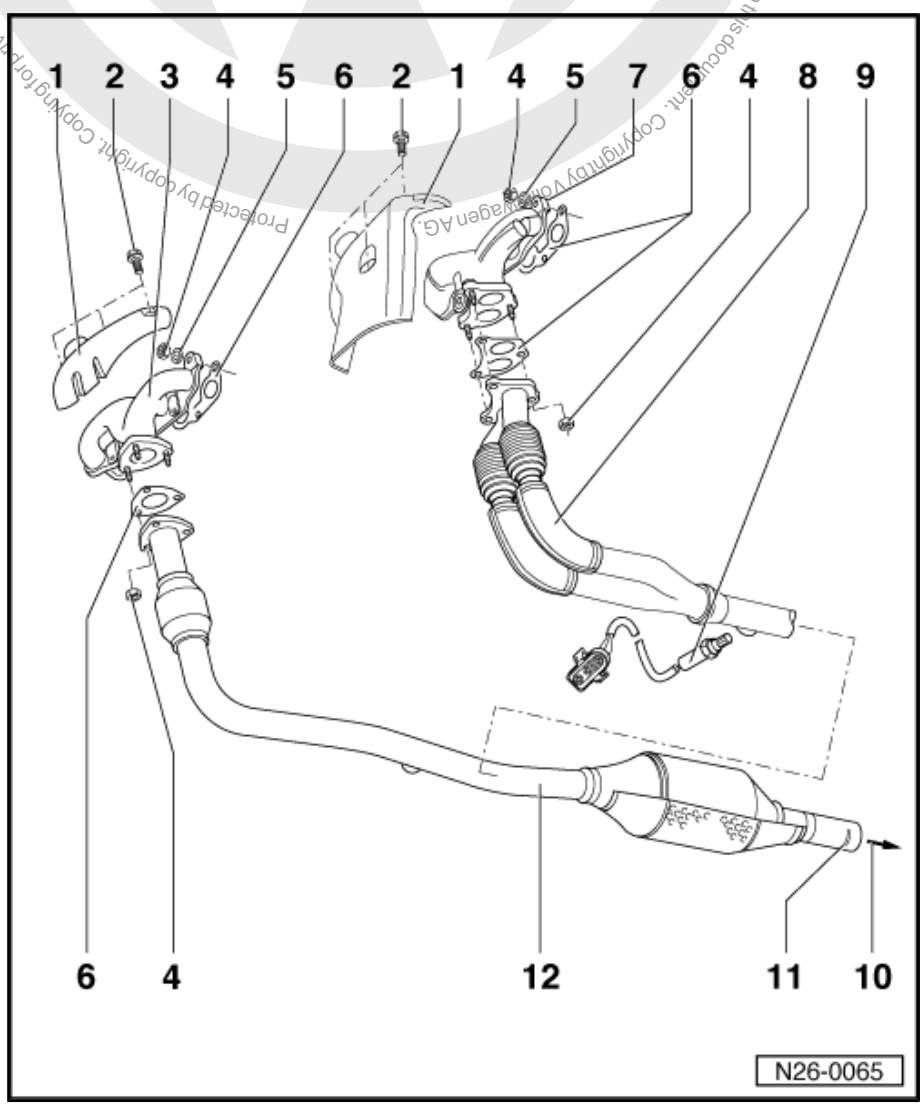

1 - Warm air collector plate

2 - 10 Nm

3 - Exhaust manifold

- ❑ Engine codes ADX, AEV, AER, AEX, AKV, ALL, ANX, APQ

4 - Lock nut, 25 Nm

- ❑ Grease threads with high-temperature grease -G 000 500-

5 - Washer

6 - Seal

- ❑ Renew

7 - Exhaust manifold

- ❑ Engine codes AEA, AEE

8 - Front exhaust pipe with catalytic converter

- ❑ Engine codes AEA, AEE

9 - Lambda probe -G39- , 55 Nm

- ❑ Grease only the thread with high-temperature grease -G 000 500- ; high-temperature grease -G 000 500- must not get into the slots of probe body
- ❑ Remove and install with lambda probe open ring spanner set -3337- .
- ❑ Engine codes AER, AEX, ANX, APQ 08.96 ▸, AKV, ALL: probe in exhaust manifold ⇒ Item 3 (page 92)

satelettronica

- ❑ Checking: ⇒ Engine - Mixture preparation; Rep. Gr. 24 ; Injection and ignition system

10 - To front silencer

11 - Marking

- ❑ Three times on circumference

12 - Front exhaust pipe with catalytic converter

- ❑ Engine codes ADX, AEV, AER, AEX, AKV, ALL, ANX, APQ
- ❑ Engine codes AKV, ALL: additionally with micro catalytic converter and heat shield

1.1.2 Silencer with mountings

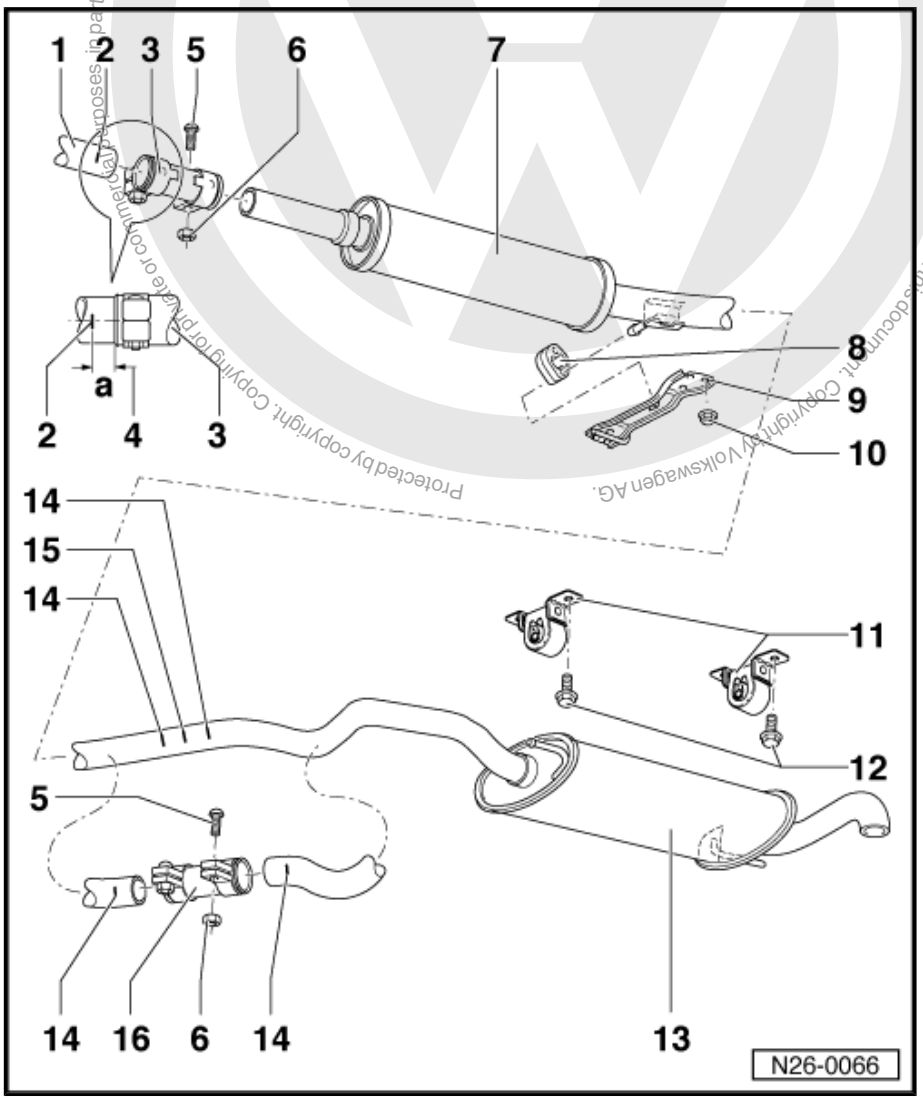

1 - Front exhaust pipe with catalytic converter

2 - Marking

- ❑ Three times on circumference

3 - Double clamp

4 - Dimension-a- = ca. 5 mm

5 - Carriage bolt

6 - 25 Nm

7 - Front silencer [9]

- ❑ Engine codes AEA, AEE ‣ 10.96: with balance weight on input side of silencer
- ❑ The balance weight must be positioned 4…5 mm away from the silencer.

8 - Retaining loop

- ❑ Renew if damaged

9 - Connecting piece

10 - 15 Nm

11 - Mounting

12 - 20 Nm + 1/4 turn (90 °) further

13 - Rear silencer[9]

14 - Marking

- ❑ Three times on circumference
- ❑ Double clamp ⇒ Item 16 (page 93) for repairs

15 - Separation point

- ❑ For repair cases [9]
- ❑ Marked by three impressions around circumference of connecting pipe

16 - Repair double clamp

- ❑ Must be slid onto the markings ⇒ Item 14 (page 93)

Protected by copyright. Copying for private or commercial purposes, in part or in whole, is not permitted unless authorised by Volkswagen AG. Volkswagen AG does not guarantee or accept any liability with respect to the correctness of information in this document. Copyright by Volkswagen AG.
satelettronica

9) During production, front and rear silencers are installed as a single component In repair cases, the front exhaust pipe and rear silencer are supplied individually with a double clamp ⇒ Item 16 (page 93) for connecting together. Cut through connecting pipe at right angles at separating point ⇒ Item 15 (page 93) using pneumatic sabre saw -V.A.G 1523A-

Protected by copyright. Copying for private or commercial purposes, in part or in whole, is not permitted unless authorised by Volkswagen AG. Volkswagen AG does not guarantee or accept any liability with respect to the correctness of information in this document. Copyright by Volkswagen AG.

satelettronica